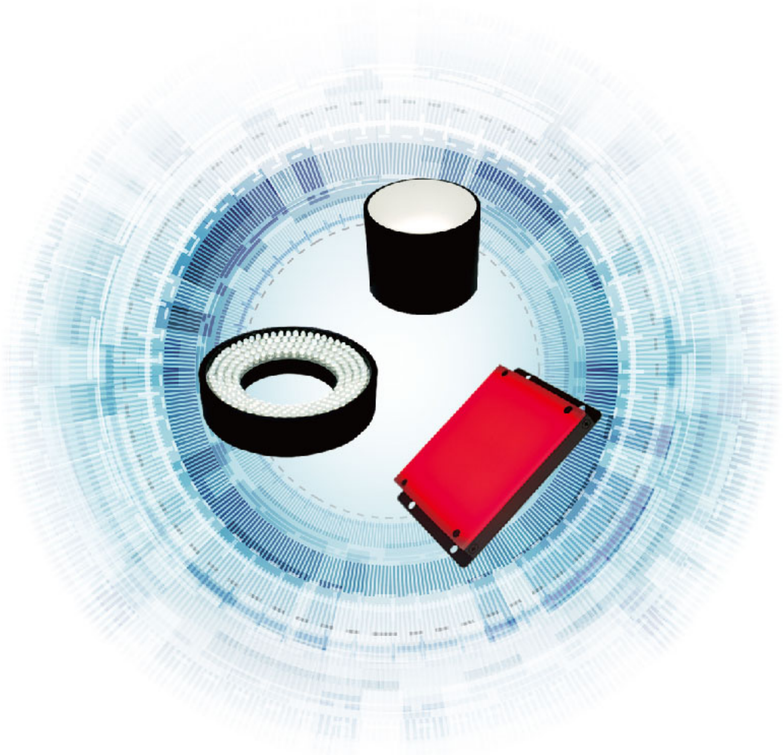

3AMechatronic

丞基技研股份有限公司

Tel:886-2-2999-7331 Fax:886-2-2278-7113

7F-7, No.12, Lane 609, Chongxin Rd., Sec.5, Sanchong District,New Taipei City 241,TAIWAN

https://www.3amled.com

Email: fmarket@3am.com.tw

2023-2024

3AM®

Advance Adventure Advantage

丞基技研

Constantly Innovate with Improvement for New Generation of LED Lighting Systems

TÜVRheinland CERTIFIED

Taiwantrade Supplier Business Information Verification

www.tuv.com ID 0000046247

ISO9001:2015

UKAS MANAGEMENT SYSTEMS

3AMechatronic

3AM Management Policy

1. Integrity

Integrity is the foundation of our business. This allows us to build long-term relationships with our partners and customers. Once we make a commitment, we fully devote ourselves to meeting that commitment.

2. Customer Orientation

We always focus on machine vision lights and dimmers. Our greatest goal is to provide our customers with the high-quality products, first-class after-sales services, and competitive prices.

3. Cooperation

We help our customers achieve success and profit by providing instant and professional solutions. Instead of taking credit for the achievements, we are pleased to share the fruits with our partners and employees.

4. Sustainable Development

We treat others with respect and encourage innovation in our business. Short-term operating results are very important to us. We also value medium-term and long-term strategic plans since these are the keys to success.

Company Background

3A Mechatronic was established in 2002 and has "3AM" as its trademark. We have a professional R&D team and efficient production lines for LED lights, LED dimmers and related products. Technological innovation and high-quality products are the aims of 3AM. It is our objective to provide our customers with the best products, service and technical support. Our customers include many automation systems and machine vision systems manufactures.

We devote ourselves to continuous quality improvements. Our products are CE approved and RoHS compliant; we also hold patents for LED light innovations. We don't only produce and sell LED lights and dimmers to customers, but also help our customers to apply these parts in the development of machine vision systems. We have a great variety of technology and many years experience with the application of LED lights, therefore we can deeply understand our customers' demand and are able to assist them to solve their problems. Aside from standardized commodities, we also provide ODM services.

You are more than welcome to contact us. We are pleased to provide you with the correlative technical support and our best service as fast as we can. 3AM is sincerely looking forward to establishing a long-term partnership with you.

Efficient Service Accuracy

3AM

We provide accurate free sample service for customers, to ellipsis chosen period and to relieve vexatious for customers. Every object has different characteristic, and accurate identifying ability must collocate with proper LED lights for each object.

Therefore, we are pleased to perform this technology support and to provide efficient and accurate free sample service and high quality for worldwide customers.

We also provide free lending servijces for worldwide customers. All our models are available for free to lend before purchasing with given propose and consulting for each models.

Quality is one of main important targets. We pursuit the highest quality advancement constantly. For our worldwide customers, we provide guarantee on all our products for luminosity in one year warranty with acceptance of the brand repair services.

Contents

Ring Lights (0°&30°)

Outline

Different angles solve uneven shape and dark corners problems.

Feature

1. The light is designed with 0° and 30°.
2. Clear image recognition for position change and uneven surfaces.
3. Diffusion plates are available.

Major applications

1. Positioning for substrates and printed boards, inspection for chip components
2. Liquid crystal adjustment, plastic container inspection
3. IC impress inspection, such as label inspection

Model explanation

GL-DR □□△△○

- Color
- Internal diameter of the ring
- External diameter of the ring

Available Models

Model	Color	Power Consumption	Weight (g)	Dimension
GL-DR3210R-24	●	24V/1.0W		
GL-DR3210W/B/G-24	○●●	24V/1.5W	24	1
GL-DR3210IR-24	●	24V/1.0W		
GL-DR4218R-24	●	24V/1.5W		
GL-DR4218W/B/G-24	○●●	24V/2.4W	36	2
GL-DR4218IR-24	●	24V/1.5W		
GL-DR5028R-24	●	24V/2.0W		
GL-DR5028W/B/G-24	○●●	24V/3.4W	45	3
GL-DR5028IR-24	●	24V/2.0W		
GL-DR6736R-24	●	24V/3.9W		
GL-DR6736W/B/G-24	○●●	24V/5.8W	83	4
GL-DR6736IR-24	●	24V/3.9W		
GL-DR9050R-24	●	24V/7.7W		
GL-DR9050W/B/G-24	○●●	24V/11.6W	138	5
GL-DR9050IR-24	●	24V/7.7W		
GL-DR12060R-24	●	24V/17.8W		
GL-DR12060W/B/G-24	○●●	24V/26.9W	418	6
GL-DR12060IR-24	●	24V/17.8W		
GL-DR16595W-24	○	24V/24.48W	616	7
GL-DR7035R-24	●	24V/4.4W		
GL-DR7035W/B/G-24	○●●	24V/6.8W	97	8
GL-DR7035IR-24	●	24V/4.4W		
GL-DR9550R-24	●	24V/5.38W		
GL-DR9550W/B/G-24	○●●	24V/8.06W	165	9
GL-DR9550IR-24	●	24V/5.38W		

Imaging examples

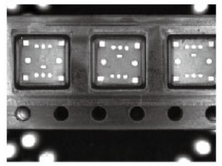

GL-DR6736R
Chip Material Package

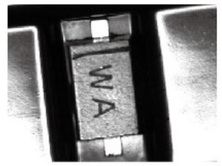

GL-DR6736W
Diode Characters

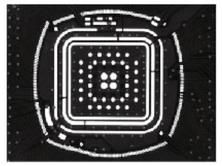

GL-DR9050W
Chip Close Shot

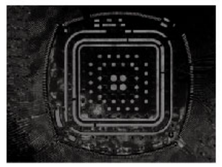

GL-DR9050W
Chip Long Distance Shot

Luminous intensity distribution characteristics

GL-DR6736R Graph

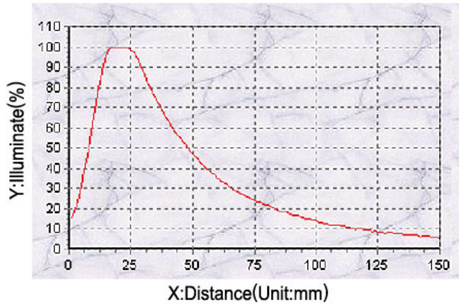

Illuminate Height:5CM,10CM,15CM

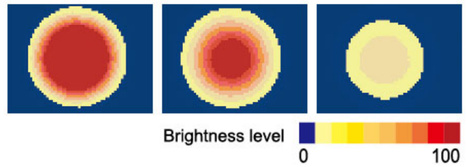

Dimensional Diagrams(mm)

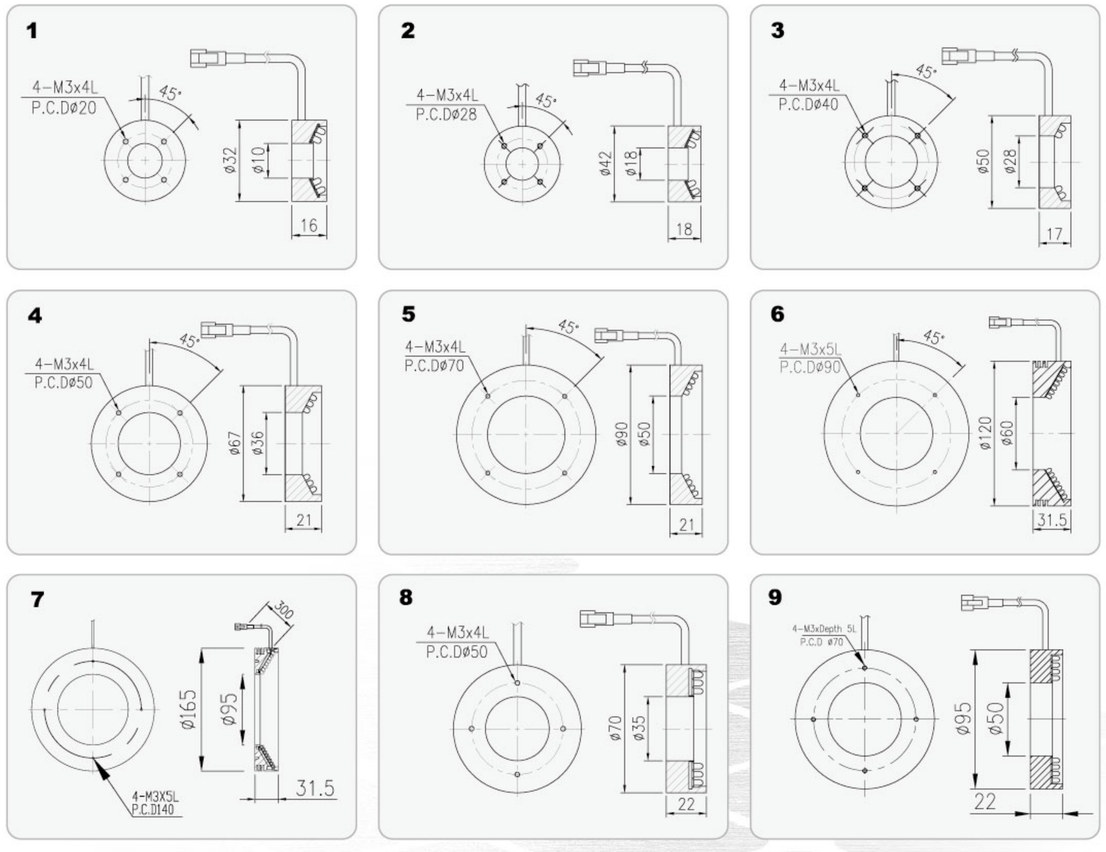

Ring Lights (15°)

Outline

High Intensity Light, Vibration resistant, Impact Resistant, and Special Lens. Illumination is 4 times more than general ring lights.

Feature

1. The light is designed with 15°.
2. Can be used for far working distance.

Major applications

1. Positioning for substrates and printed boards, inspection for chip components
2. Liquid crystal adjustment, plastic container inspection
3. IC impress inspection

Model explanation

GL-DRC □□△△○

□—— External diameter of the ring
△—— Internal diameter of the ring
○—— Color

Available Models

Model	Color	Power Consumption	Weight (g)	Dimension
GL-DRC5618R	●	12V/2.73W	130	1
GL-DRC5618W/B/G	○●●	12V/5.33W		
GL-DRC7035R	●	12V/5.74W	212	2
GL-DRC7035W/B/G	○●●	12V/7.49W		
GL-DRC9050R	●	12V/5.74W	324	3
GL-DRC9050W/B/G	○●●	12V/7.33W		
GL-DRC12060R	●	12V/8.61W	621	4
GL-DRC12060W/B/G	○●●	12V/8.78W		
GL-HDRC7035W/B/G-24	○●●	24V/24.36W	148	5

Luminous intensity distribution characteristics

GL-DRC7035 Graph

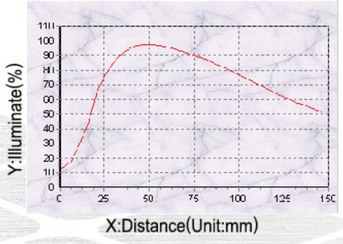

Illuminate Height: 1CM, 2CM, 5CM

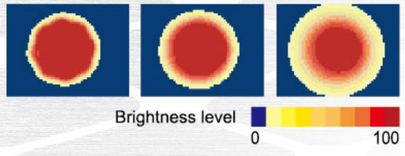

Dimensional Diagrams(mm)

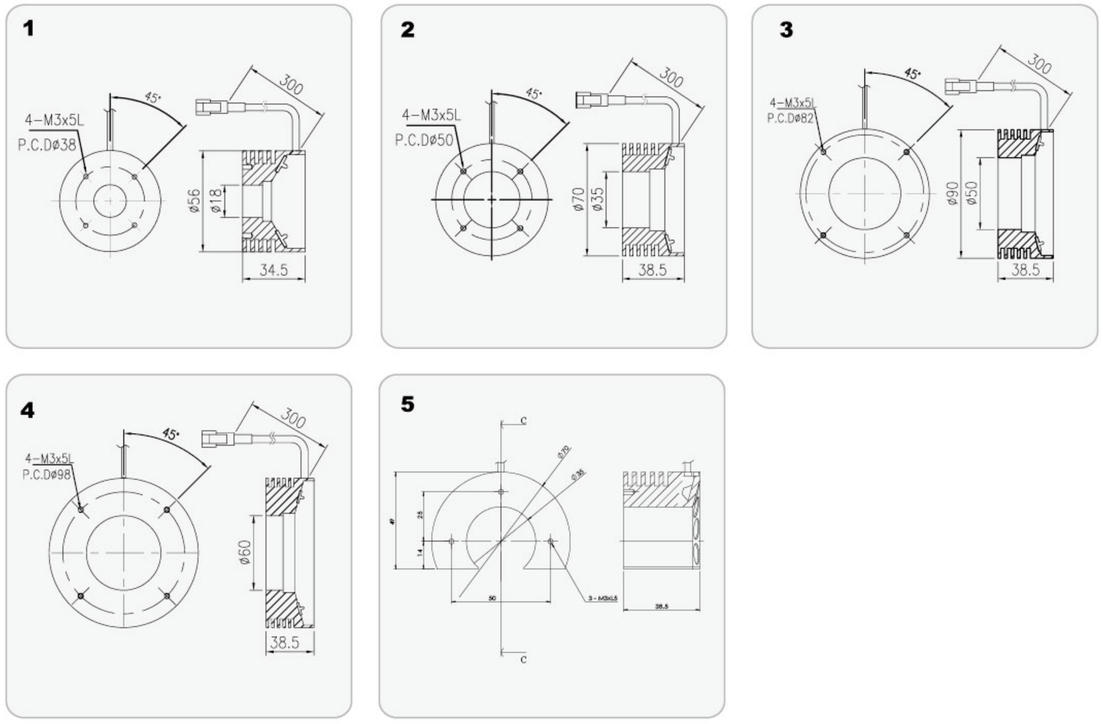

Low Angle Ring Lights (60°&90°)

Outline

Different angles to solve object's uneven shape and dark corners problems.

Feature

1. The light is designed with 60° and 90°.
2. Clear image recognition specially for uneven surfaces, scratches, and laser engraving.
3. Diffusion rings are available.

Major applications

1. BGA solder ball position, shape and area in inspection.
2. Inspection of wafers or glass substrates for scratches and stain.
3. Reading laser engraving
4. Edge detection and defect inspection

Model explanation

GL-LDR □□△△○
- Color
- Internal diameter of the ring
- External diameter of the ring

GL-FDR □□△△○
- Color
- Internal diameter of the ring
- External diameter of the ring

Available Models

Model	Color	Power Consumption	Weight (g)	Dimension
GL-LDR4822R-24	●	24V/1.9W		
GL-LDR4822W/B/G-24	○●●	24V/2.8W	47	1
GL-LDR4822IR-24	●	24V/1.9W		
GL-LDR5028IR-24	●	24V/1.92W	52	2
GL-LDR7448R-24	●	24V/3.9W		
GL-LDR7448W/B/G-24	○●●	24V/5.8W	81	3
GL-LDR7448IR-24	●	24V/3.9W		
GL-LDR10068R-24	●	24V/7.2W		
GL-LDR10068W/B/G-24	○●●	24V/10.6W	140	4
GL-LDR10068IR-24	●	24V/7.2W		
GL-LDR13296R-24	●	24V/10.6W		
GL-LDR13296W/B/G-24	○●●	24V/15.9W	177	5
GL-LDR13296IR-24	●	24V/10.6W		
GL-LDR170134R-24	●	24V/13.5W		
GL-LDR170134W/B/G-24	○●●	24V/20.2W	231	6
GL-LDR170134IR-24	●	24V/13.5W		
GL-LDQ7040R-24	●	24V/9.21W	204	7
GL-LDQ7040W/B/G-24	○●●	24V/11.2W		
GL-FDR7546R-24	●	24V/2.0W		
GL-FDR7546W/B/G-24	○●●	24V/2.9W	55	8
GL-FDR7546IR-24	●	24V/2.0W		
GL-FDR8454R-24	●	24V/2.0W		
GL-FDR8454W/B/G-24	○●●	24V/2.9W	65	9
GL-FDR8454IR-24	●	24V/2.0W		

Model	Color	Power Consumption	Weight (g)	Dimension
GL-FDR12292R-24	●	24V/2.9W		
GL-FDR12292W/B/G-24	○●●	24V/4.4W	95	10
GL-FDR12292IR-24	●	24V/2.9W		
GL-FDR156108R-24	●	24V/3.9W		
GL-FDR156108W/B/G-24	○●●	24V/5.8W	195	11
GL-FDR156108IR-24	●	24V/3.9W		

Imaging examples

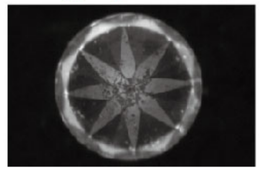

GL-LDR7448W
Diamond Cutting

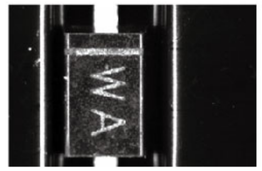

GL-LDR7448W
Diode Characters

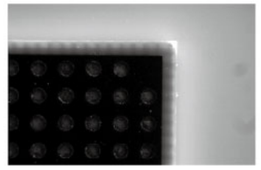

GL-FDR7546W
PCB Edge Abrade

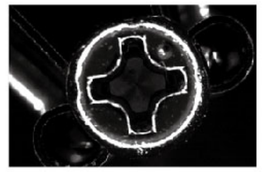

GL-FDR156108R
Screw Edge

Luminous intensity distribution characteristics

GL-LDR7448R Graph

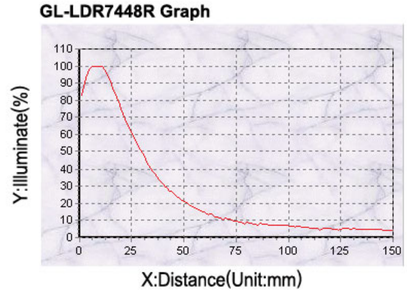

Illuminate Height:5CM,10CM,15CM

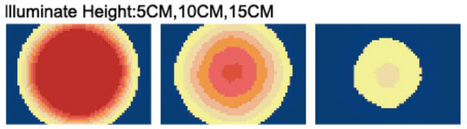

Brightness level 0 100

Dimensional Diagrams(mm)

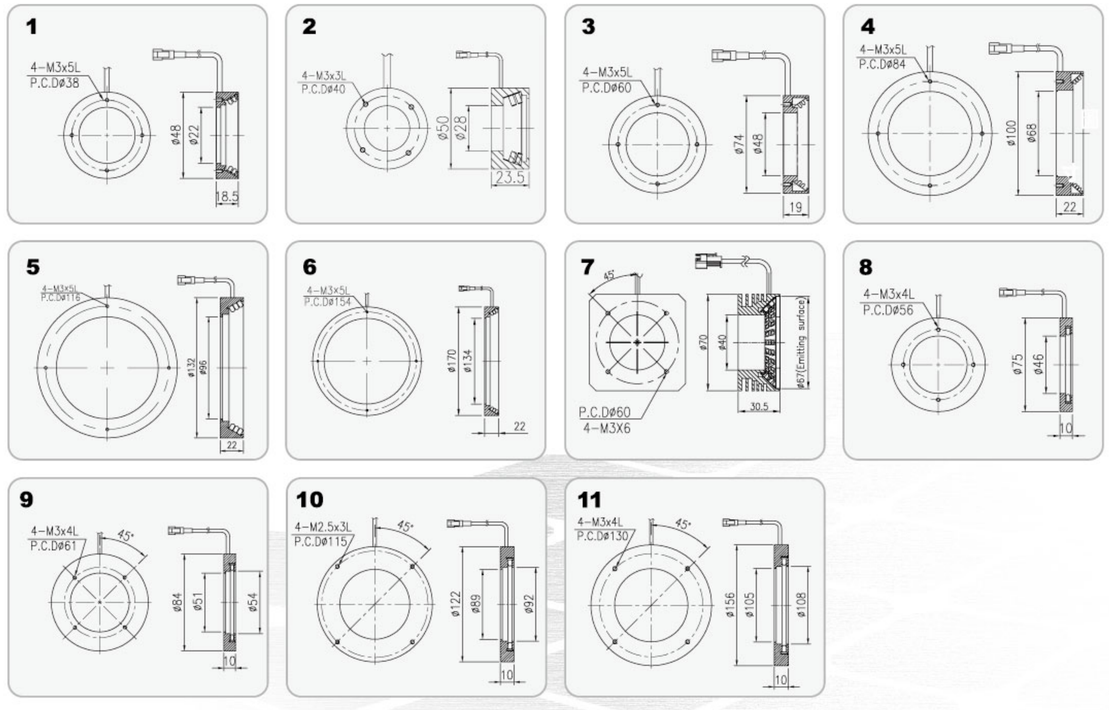

Bar Lights & Oblique Bar lights

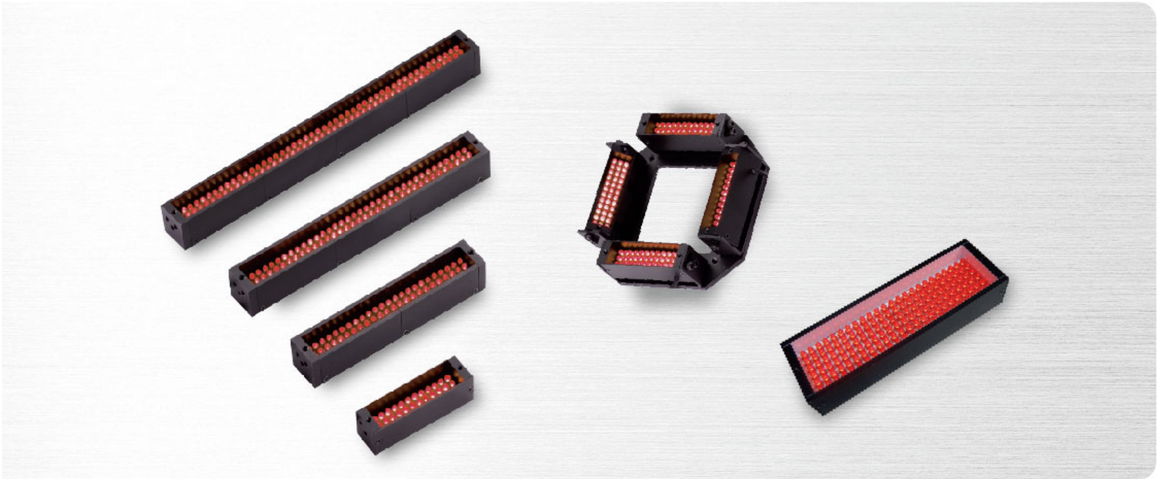

Outline

Light direction and angle can be adjustable.
Suitable for large area lighting

Feature

1. Light can be customized. The largest standard model is 510mm.
2. Shape is flexible to change to rectangular or square.
3. Diffusion rings are available

Major applications

1. Inspection for LED defect
2. Identify for multiple shapes
3. Fabrication substrates crack inspection, metal board surface inspection
4. Identify size measurement and shape for electronic parts

Model explanation

GL-DB □□△△○

- Color
- Dimension of the width
- Dimension of the length

Available Models

Model	Color	Power Consumption	Weight (g)	Dimension
GL-DB3010R-24	●	24V/0.48W	25	1
GL-DB3010W/B/G-24	○●●	24V/0.72W		
GL-DB3010IR-24	●	24V/0.48W		
GL-DB3010R-DP-24	●	24V/0.48W	26	2
GL-DB3010W/B/G-DP-24	○●●	24V/0.72W		
GL-DB3010IR-DP-24	●	24V/0.48W		
GL-DB4520W/B/G-24	○●●	24V/1.44W	36	3
GL-DB6020R-24	●	24V/1.44W	41	4
GL-DB6020W/B/G-24	○●●	24V/2.16W		
GL-DB6020IR-24	●	24V/1.44W		
GL-DB8020W/B/G-24	○●●	24V/2.88W	51	5
GL-DB11020R-24	●	24V/2.88W	72	6
GL-DB11020W/B/G-24	○●●	24V/4.32W		
GL-DB11020IR-24	●	24V/2.88W		
GL-DB16020R-24	●	24V/4.32W	101	7
GL-DB16020W/B/G-24	○●●	24V/4.37W		
GL-DB16020IR-24	●	24V/4.32W		
GL-DB21020R-24	●	24V/5.76W	131	8
GL-DB21020W/B/G-24	○●●	24V/8.64W		
GL-DB21020IR-24	●	24V/5.76W		
GL-DB26020R-24	●	24V/7.2W	160	9
GL-DB26020W/B/G-24	○●●	24V/10.8W		
GL-DB26020IR-24	●	24V/7.2W		
GL-DB31020R-24	●	24V/8.64W	190	10
GL-DB31020W/B/G-24	○●●	24V/12.96W		
GL-DB31020IR-24	●	24V/8.64W		
GL-DB36020R-24	●	24V/10.08W	222	11
GL-DB36020W/B/G-24	○●●	24V/14.88W		
GL-DB36020IR-24	●	24V/10.08W		

Imaging examples

GL-DB6020B
DSP IC

GL-DB6020W
CF Card Character

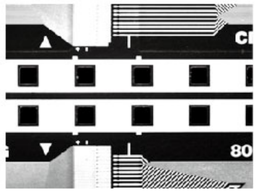

GL-DB6020W
Soft Bus

GL-DB6020W*2
Terminal

Luminous intensity distribution characteristics

GL-DB6020R Graph

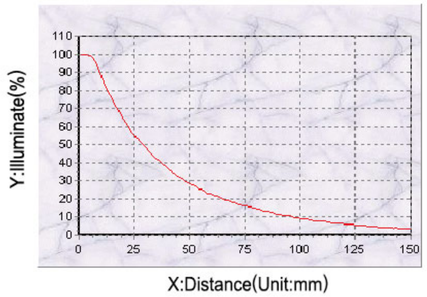

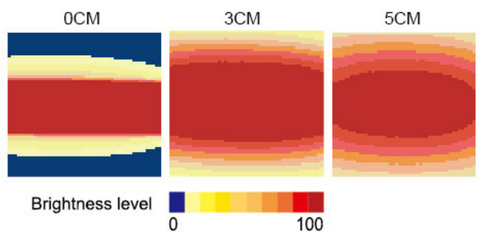

Available Models

Model	Color	Power Consumption	Weight (g)	Dimension
GL-DB41020R-24	●	24V/11.52W	253	12
GL-DB41020W/B/G-24	○●●	24V/17.28W		
GL-DB41020IR-24	●	24V/11.52W		
GL-DB46020R-24	●	24V/12.96W	285	13
GL-DB46020W/B/G-24	○●●	24V/19.2W		
GL-DB46020IR-24	●	24V/12.96W		
GL-DB51020R-24	●	24V/14.4W	317	14
GL-DB51020W/B/G-24	○●●	24V/21.6W		
GL-DB51020IR-24	●	24V/14.4W		
GL-DB6034R-24	●	24V/2.88W	60	15
GL-DB6034W/B/G-24	○●●	24V/4.32W		
GL-DB6034IR-24	●	24V/2.88W		
GL-DB11034R-24	●	24V/5.76W	623	16
GL-DB11034W/B/G-24	○●●	24V/8.64W		
GL-DB11034IR-24	●	24V/5.76W		
GL-DB16034R-24	●	24V/8.64W	130	17
GL-DB16034W/B/G-24	○●●	24V/12.96W		
GL-DB16034IR-24	●	24V/8.64W		
GL-DB21034R-24	●	24V/46.08W	180	18
GL-DB21034W/B/G-24	○●●	24V/69.14W		
GL-DB21034IR-24	●	24V/46.08W		
GL-DB26034R-24	●	24V/14.4W	189	19
GL-DB26034W/B/G-24	○●●	24V/21.6W		
GL-DB26034IR-24	●	24V/14.4W		
GL-DB31034R-24	●	24V/17.28W	300	20
GL-DB31034W/B/G-24	○●●	24V/25.96W		
GL-DB31034IR-24	●	24V/17.28W		
GL-DB6020R4-24	●	24V/(1.44W)*4	280	21
GL-DB6020W4/B4/G4-24	○●●	24V/(2.16W)*4		
GL-DB6020IR4-24	●	24V/(1.44W)*4		
GL-DB8020W4-24	○	24V/(2.88W)*4	384	22
GL-DB11020R4-24	●	24V/(2.88W)*4	511	23
GL-DB11020W4/B4/G4-24	○●●	24V/(4.4W)*4		
GL-DB11020IR4-24	●	24V/(2.88W)*4		
GL-DB11034R4-24	●	24V/(5.8W)*4	460	24
GL-DB11034W4/B4/G4-24	○●●	24V/(8.7W)*4		
GL-DB11034IR4-24	●	24V/(5.8W)*4		
GL-DB16020R4-24	●	24V/(4.32W)*4	667	25
GL-DB16020W4/B4/G4-24	○●●	24V/(4.37W)*4		
GL-DB16020IR4-24	●	24V/(4.32W)*4		
GL-DB21034R4-24	●	24V/(11.52W)*4	943	26
GL-DB21034W4/B4/G4-24	○●●	24V/(17.28W)*4		
GL-DB21034IR4-24	●	24V/(11.52W)*4		
GL-DB31020R4-24	●	24V/(8.64W)*4	1286	27
GL-DB31020W4/B4/G4-24	○●●	24V/(12.96W)*4		
GL-DB31020IR4-24	●	24V/(8.64W)*4		

Dimensional Diagrams(mm)

1

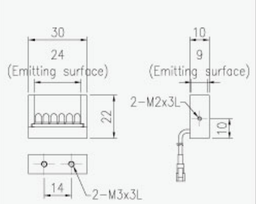

2

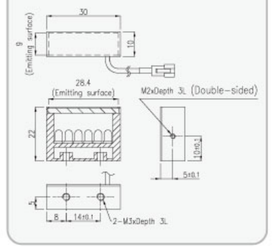

3

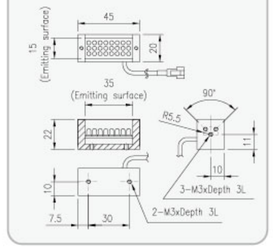

4

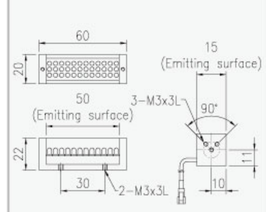

5

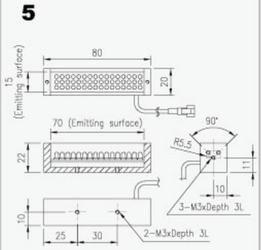

6

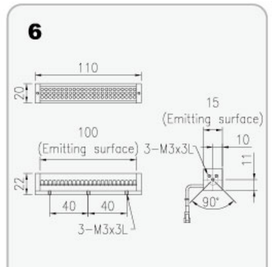

7

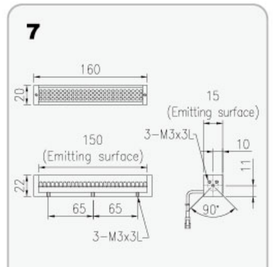

8

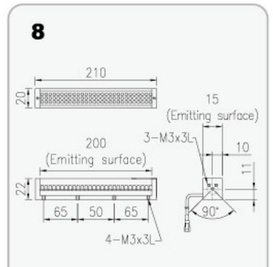

9

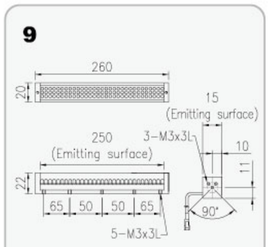

10

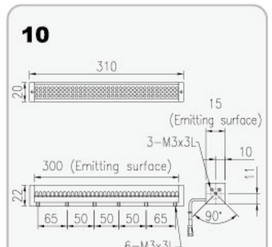

11

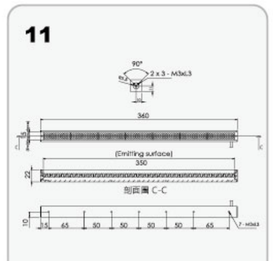

12

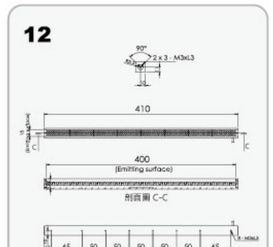

13

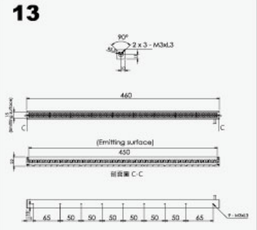

14

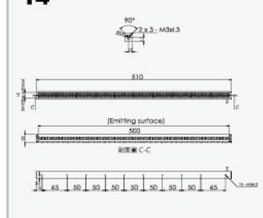

15

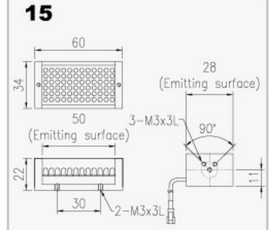

16

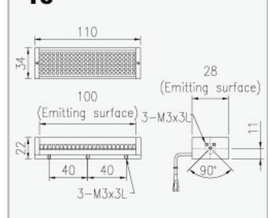

17

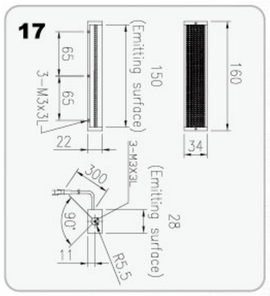

18

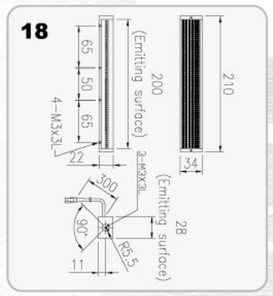

19

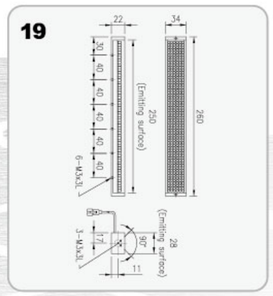

20

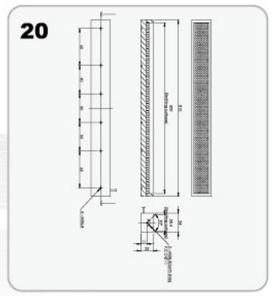

21

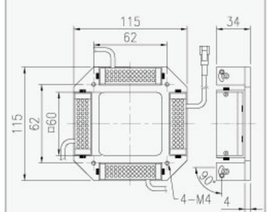

22

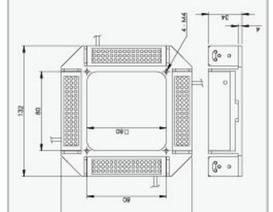

23

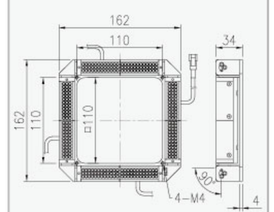

24

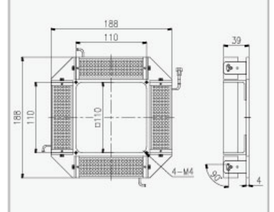

25

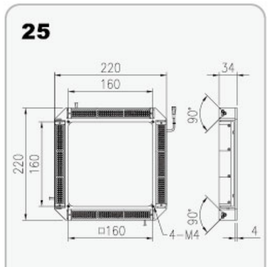

26

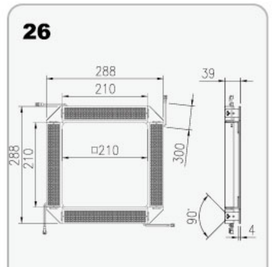

27

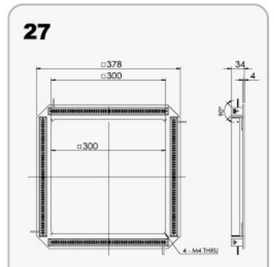

Small Dome Lights

Outline

Object can be completely covered by small dome light to achieve shadowless illumine.

Feature

1. Provide higher uniformity than conventional lights.
2. Inspection of uneven surfaces and small objects.

Major applications

1. Inspections of the print on the bottom of aluminum cans
2. Curved metal surfaces and similar surfaces

Model explanation

GL-DO □□△△○

- Color
- Internal diameter of the ring
- External diameter of the ring

Available Models

Model	Color	Power Consumption	Weight (g)	Dimension
GL-DO5411R-24	●	24V/2.88W	130	1
GL-DO5411W/B/G-24	○●●	24V/4.32W		
GL-DO5411IR-24	●	24V/2.88W		

Luminous intensity distribution characteristics

GL-DO5411W Graph

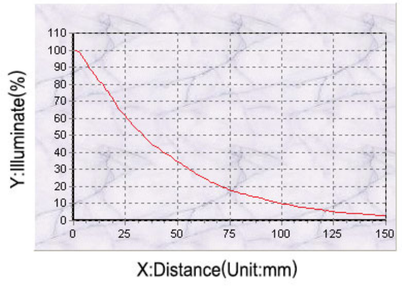

Illuminate Height: 5CM,10CM,15CM

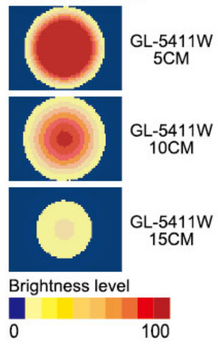

Imaging examples

GL-DO5411R
Transistor Character

GL-DO5411W
PC Board

GL-DO5411W
Plastic Can Opening

GL-DO5411B
Diode Parts

Dimensional Diagrams(mm)

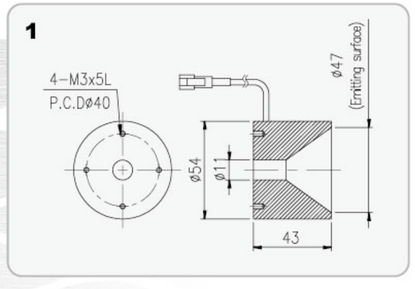

Shadowless Lights

Outline

Ability to evenly diffused lighting from low angle with the diffusion plate. Best for preventing the halo effect.

Feature

1. Provide higher uniformity than conventional lights.
2. Suitable for multiple applications at different working distances.
3. Inspection of large objects and uneven surfaces.

Major applications

1. IC wafer inspection & substrate part inspection
2. Inspection from the side and to emerge from internal surfaces of object for stain
3. Visual inspection of wafers
4. Solder inspection& connector pitch inspection

Model explanation

GL-PR □□△△○

- Color
- Internal diameter of the ring
- External diameter of the ring

Available Models

Model	Color	Power Consumption	Weight (g)	Dimension
GL-PR6739R-24	●	24V/2.4W	130	1
GL-PR6739W/B/G-24	○●●	24V/3.84W		
GL-PR6739IR-24	●	24V/2.4W		
GL-PR9058R-24	●	24V/3.36W	180	2
GL-PR9058W/B/G-24	○●●	24V/4.8W		
GL-PR9058IR-24	●	24V/3.36W		
GL-PR136108R-24	●	24V/7.2W	227	3
GL-PR136108W/B/G-24	○●●	24V/10.6W		
GL-PR136108IR-24	●	24V/7.2W		
GL-PR21080W-24	○	24V/34.56W	967	4

Imaging examples

GL-PR6739R
LED Chip

GL-PR136108R
Aluminum Ring For Tire

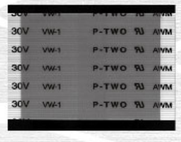

GL-PR136108R
Character On Bus

GL-PR136108W
IC Chip

Luminous intensity distribution characteristics

GL-PR6739R Graph

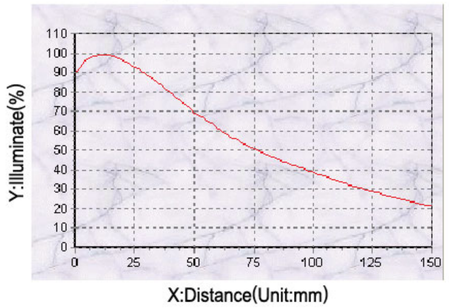

Illuminate Height:5CM,10CM,15CM

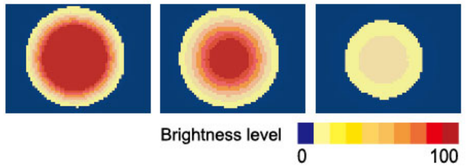

Dimensional Diagrams(mm)

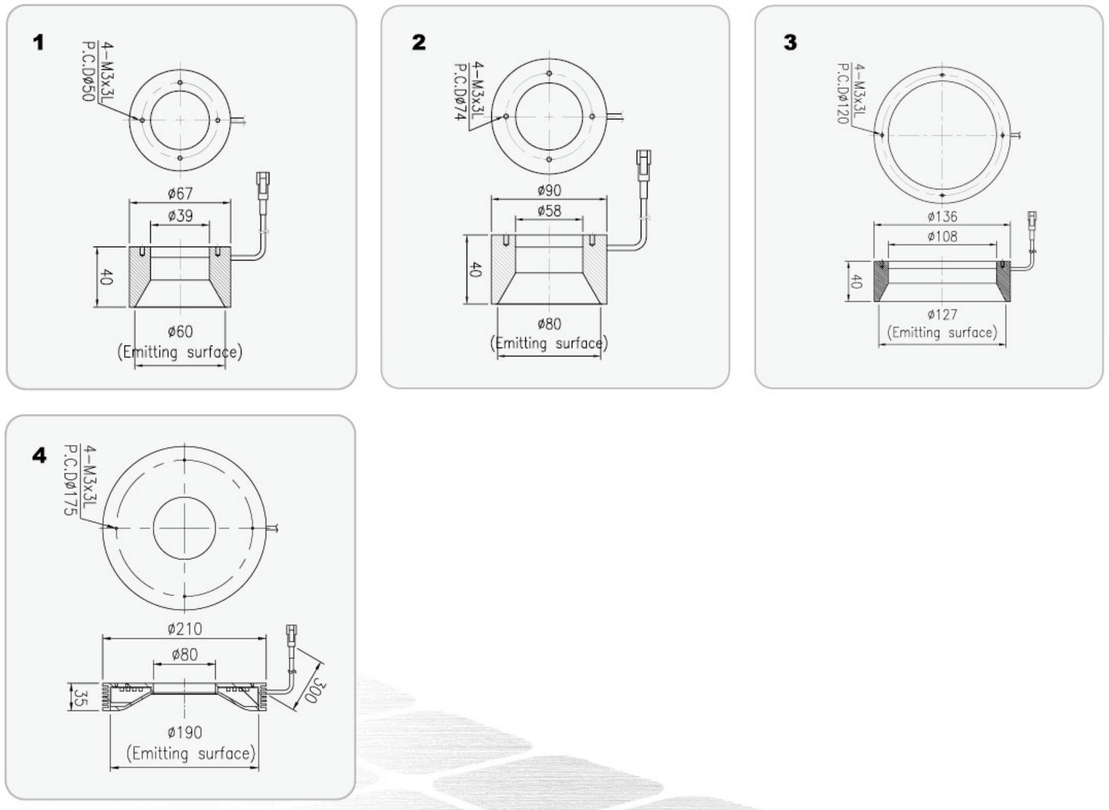

Shadowless Ring Lights

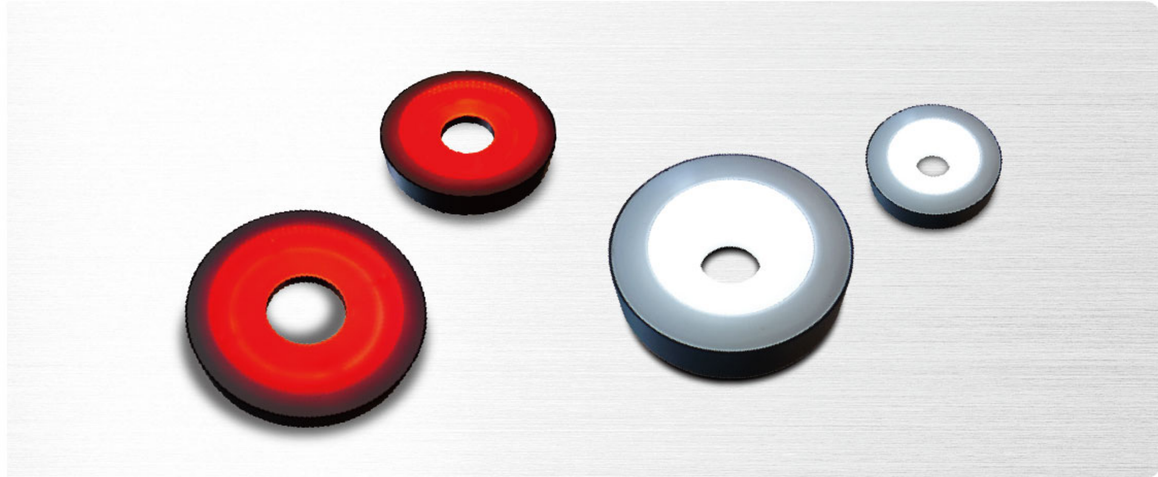

Outline

Ability to evenly diffused lighting on shiny objects with the diffusion plate.
Best for preventing the halo effect.

Feature

1. Provide higher uniformity than conventional lights.
2. Inspection of uneven surfaces and reflective materials.

Major applications

1. IC wafer inspection & substrate part inspection
2. Inspection from the side and to emerge from internal surfaces of object for stain
3. Visual inspection of wafers
4. Solder inspection & connector pitch inspection

Model explanation

GL-LFR- □□△△○
- Color
- Internal diameter of the ring
- External diameter of the ring

GL-SRL- □□△△○
- Color
- Internal diameter of the ring
- External diameter of the ring

Available Models

Model	Color	Power Consumption	Weight (g)	Dimension
GL-LFR7420R-24	●	24V/1.92W		
GL-LFR7420W/B/G-24	○●●	24V/2.88W	92	1
GL-LFR7420IR-24	●	24V/1.92W		
GL-LFR10233R-24	●	24V/2.4W		
GL-LFR10233W/B/G-24	○●●	24V/3.9W	160	2
GL-LFR10233IR-24	●	24V/2.4W		
GL-LFR12544R-24	●	24V/3.4W		
GL-LFR12544W/B/G-24	○●●	24V/5.3W	234	3
GL-LFR12544IR-24	●	24V/3.4W		
GL-SRL7420R-24	●	24V/3.9W		
GL-SRL7420W/B/G-24	○●●	24V/5.8W	101	4
GL-SRL7420IR-24	●	24V/3.9W		
GL-SRL10233R-24	●	24V/5.3W		
GL-SRL10233W/B/G-24	○●●	24V/8.2W	179	5
GL-SRL10233IR-24	●	24V/5.3W		
GL-SRL12544R-24	●	24V/6.8W		
GL-SRL12544W/B/G-24	○●●	24V/10.1W	259	6
GL-SRL12544IR-24	●	24V/6.8W		
GL-SRL20075R-24	●	24V/7.4W		
GL-SRL20075W/B/G-24	○●●	24V/12.96W	150	7
GL-SRL20075IR-24	●	24V/7.4W		

Luminous intensity distribution characteristics

GL-LFR7420W Graph

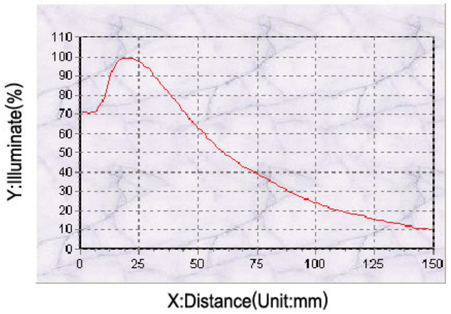

Illuminate Height:5CM,10CM,15CM

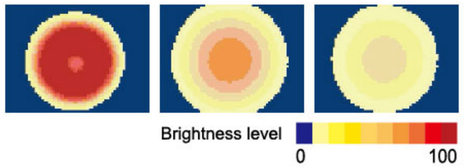

Dimensional Diagrams(mm)

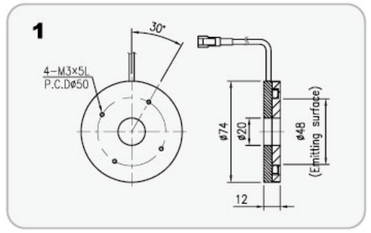

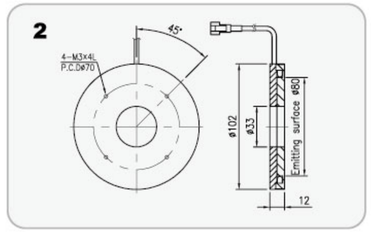

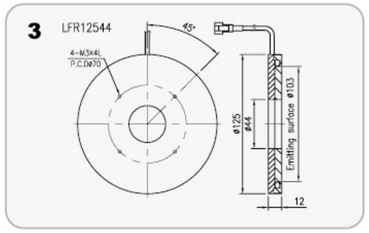

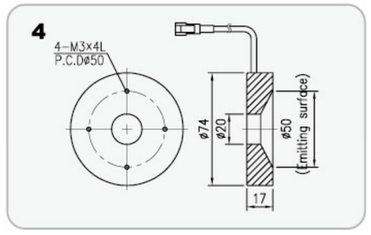

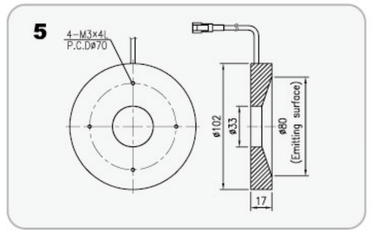

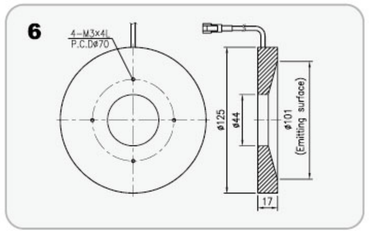

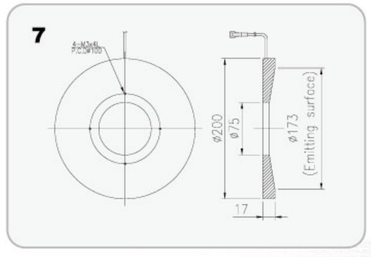

Coaxial Lights

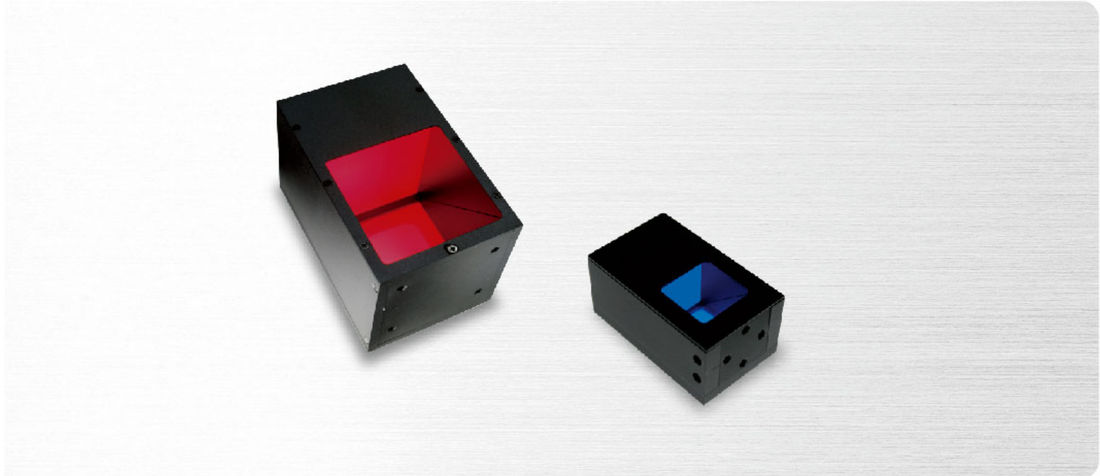

Outline

Diffused light from the LED is illuminated on the same axis as the camera axis. Light outlet direction changes from vertical to horizontal.

Feature

1. High-precision optical glass will increase the light transmittance and resolution.
2. Prevent ghost images and reflected light.
3. Allow high-resolution imaging.
4. Inspection of reflective materials.

Major applications

1. Inspection of highly reflective surfaces, such as wafers, metal surfaces, film, liquid crystals and glass.
2. Imprint check
3. Inspection of pattern of printed boards.

Model explanation

GL-IFV □□ ○

- Color
- Dimension of the square emitting surface

Available Models

Model	Color	Power Consumption	Weight (g)	Dimension
GL-IFV20R-24	●	24V/0.96W		
GL-IFV20W/B/G-24	○●●	24V/1.44W	60	1
GL-IFV20IR-24	●	24V/0.96W		
GL-IFV34R-24	●	24V/2.4W		
GL-IFV34W/B/G-24	○●●	24V/3.9W	132	2
GL-IFV34IR-24	●	24V/2.4W		
GL-IFV40R-24	●	24V/2.88W		
GL-IFV40W/B/G-24	○●●	24V/4.32W	184	3
GL-IFV40IR-24	●	24V/2.88W		
GL-IFV50R-24	●	24V/5.76W		
GL-IFV50W/B/G-24	○●●	24V/8.64W	260	4
GL-IFV50IR-24	●	24V/5.76W		
GL-IFV70R-24	●	24V/11.52W		
GL-IFV70W/B/G-24	○●●	24V/17.28W	580	5
GL-IFV70IR-24	●	24V/11.52W		
GL-IFV100R-24	●	24V/23.04W		
GL-IFV100W/B/G-24	○●●	24V/24.19W	885	6
GL-IFV100IR-24	●	24V/23.04W		
GL-IFV130R-24	●	24V/40.8W		
GL-IFV130W/B/G-24	○●●	24V/61.44W	1420	7
GL-IFV130IR-24	●	24V/40.8W		
GL-IFV200R-24	●	24V/57.6W		
GL-IFV200W/B/G-24	○●●	24V/86.4W	6400	8
GL-IFV200IR-24	●	24V/57.6W		

Model	Color	Power Consumption	Weight (g)	Dimension
GL-IFV2-34R-24	●	24V/2.3W	146	9
GL-IFV2-34W/B/G-24	○●●	24V/4.89W		
GL-IFV2-130IR940-24	●	24V/27.6W	213	10
GL-IFV3-34R-24	●	24V/8.16W	182	11
GL-IFV3-34W/B/G-24	○●●	24V/20.54W		

Imaging examples

GL-IFV40W
Screw Surface

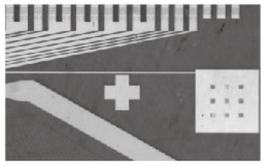

GL-IFV40W
LCD Panel Circuit

GL-IFV40B
2D Bar Code

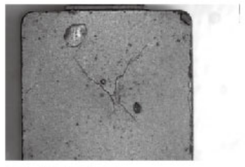

GL-IFV50R
Iron Powder Capacitance

Luminous intensity distribution characteristics

GL-IFV40R Graph

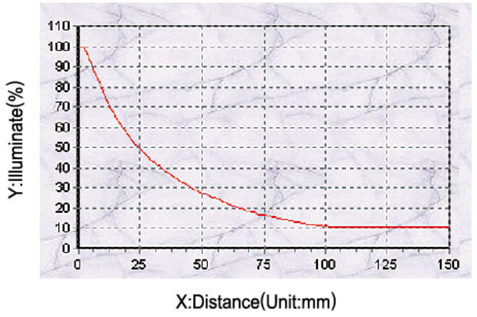

Illuminate Height:5CM,10CM,15CM

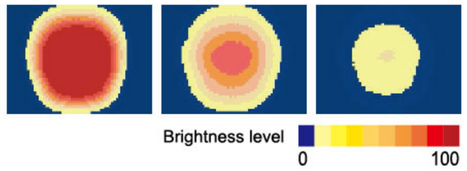

Dimensional Diagrams(mm)

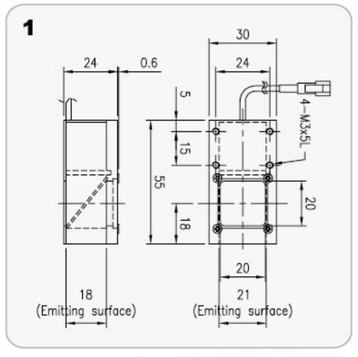

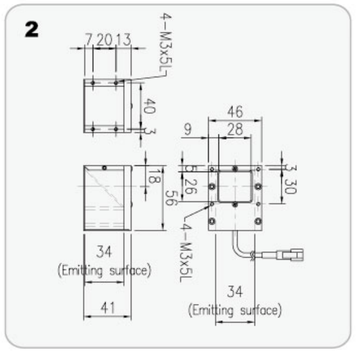

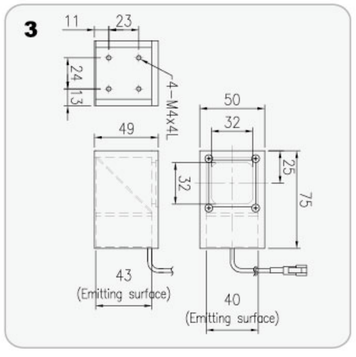

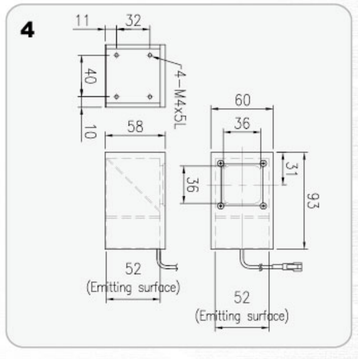

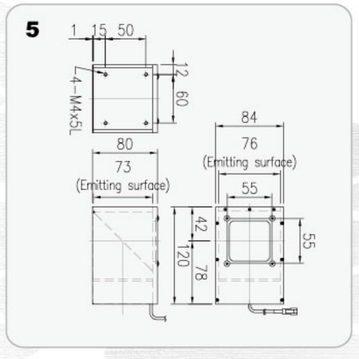

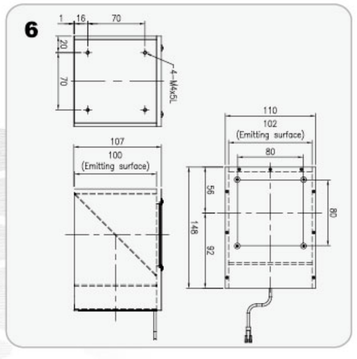

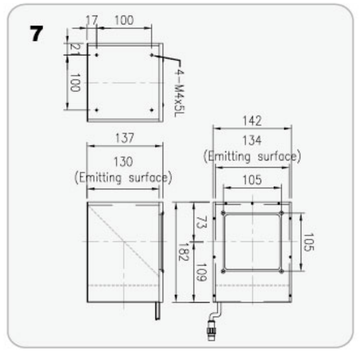

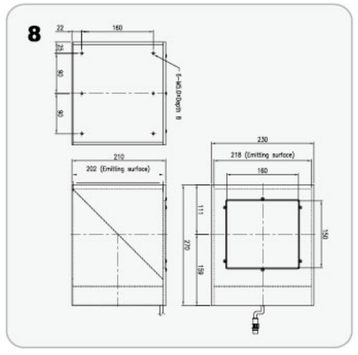

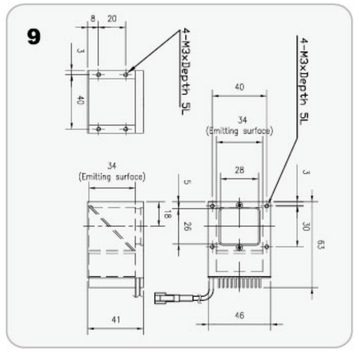

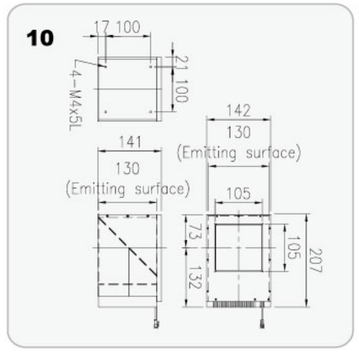

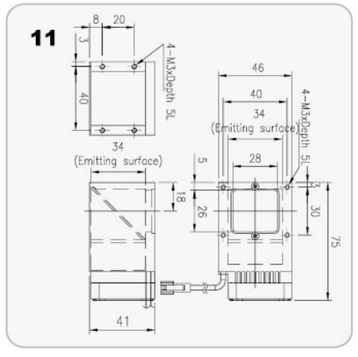

NEW High Directivity Coaxial Lights

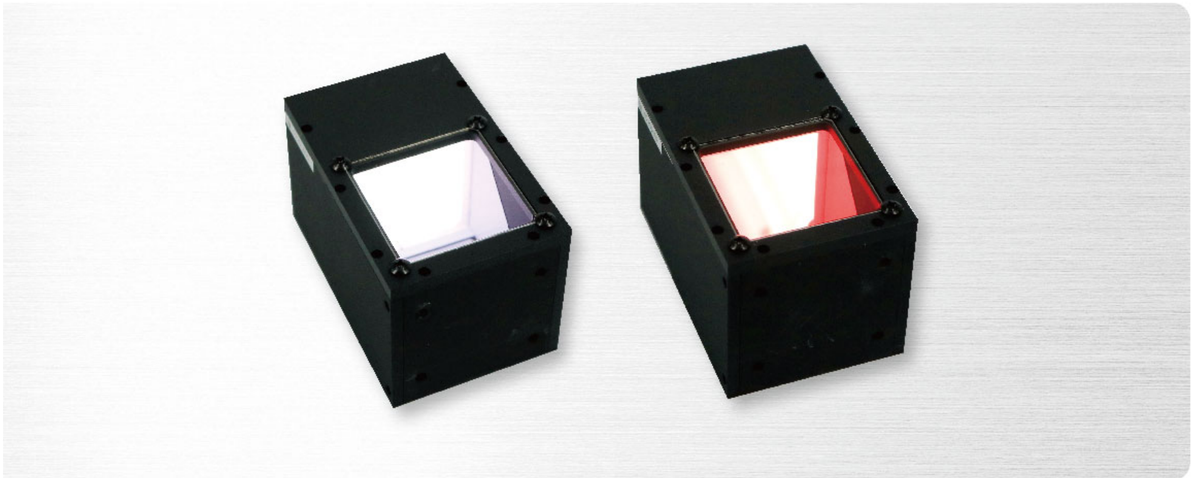

Outline

High directivity light is illuminated on the same axis as the camera axis.

Feature

1. Use HI-POWER LED, illumination is more than 3 times that IFV series.
2. Window mirror increases light transmittance and reduce light reflection.
3. Beam splitter reduces image shift (ghosting), improves resolution, and supports high-resolution camera.
4. Equipped with a high-directivity optical mode, to suppress light diffusion
5. Equipped with a high-directivity optical film, to have greatly improved brightness.
6. Suitable for the test object with high reflection mirror characteristics.
7. No blurred grayscale gradient that affects the accuracy.
8. To suppress surface reflection to make damages on the surface to clear images.

Major applications

1. Inspection of highly reflective surfaces, such as wafers, metal surfaces, film, liquid crystals and glass.
2. Imprint check
3. Inspection of pattern of printed boards.

Available Models

Model	Color	Power Consumption	Weight (g)	Dimension
GL-DIFV20R-24	●	24V/0.58W	60	1
GL-DIFV20W/B/G-24	○●●	24V/0.86W		
GL-DIFV20IR-24	●	24V/0.58W		
GL-DIFV34R-24	●	24V/1.44W	132	2
GL-DIFV34W/B/G-24	○●●	24V/2.3W		
GL-DIFV34IR-24	●	24V/1.44W		
GL-DIFV40R-24	●	24V/1.72W	184	3
GL-DIFV40W/B/G-24	○●●	24V/2.59W		
GL-DIFV40IR-24	●	24V/1.72W		
GL-DIFV50R-24	●	24V/3.45W	260	4
GL-DIFV50W/B/G-24	○●●	24V/5.18W		
GL-DIFV50IR-24	●	24V/3.45W		
GL-DIFV70R-24	●	24V/6.91W	580	5
GL-DIFV70W/B/G-24	○●●	24V/10.36W		
GL-DIFV70IR-24	●	24V/6.91W		
GL-DIFV100R-24	●	24V/13.82W	885	6
GL-DIFV100W/B/G-24	○●●	24V/20.74W		
GL-DIFV100IR-24	●	24V/13.82W		
GL-DIFV130R-24	●	24V/24.48W	1420	7
GL-DIFV130W/B/G-24	○●●	24V/36.86W		
GL-DIFV130IR-24	●	24V/24.48W		
GL-DIFV200R-24	●	24V/34.56W	6400	8
GL-DIFV200W/B/G-24	○●●	24V/51.84W		
GL-DIFV200IR-24	●	24V/34.56W		

Model explanation

GL-DIFV□□○

- Color
- Dimension of the square emitting surface

Luminous intensity distribution characteristics

Illuminate Height:5CM,10CM,15CM

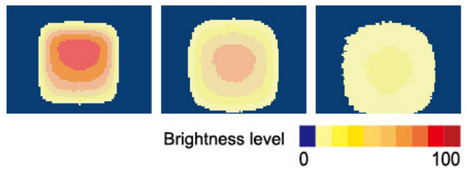

Dimensional Diagrams(mm)

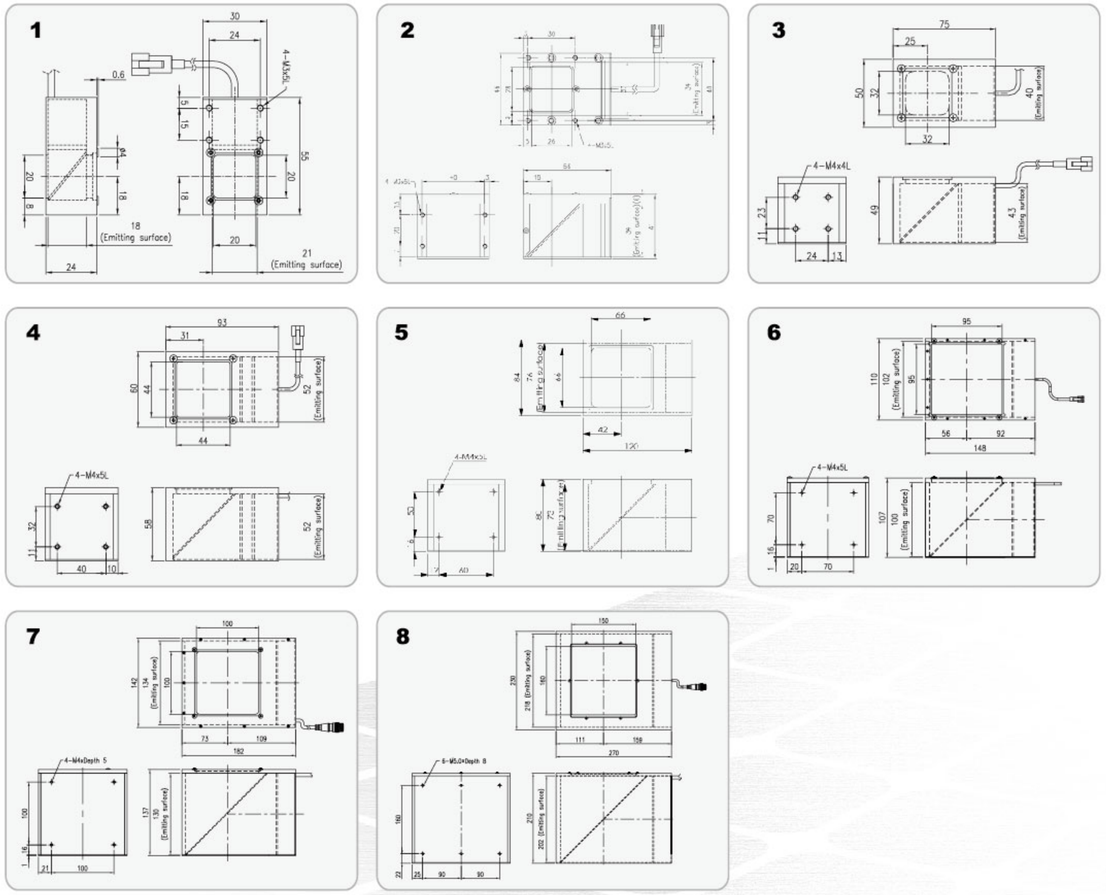

NEW High Directivity and Intensity Coaxial Lights

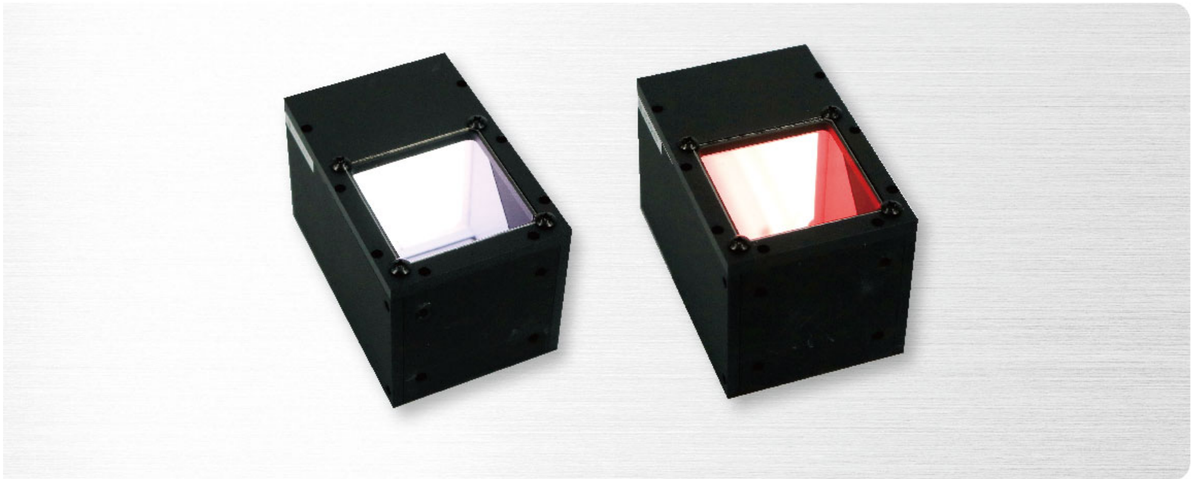

Outline

Highly directivity and intensity light is illuminated on the same axis as the camera axis.

Feature

1. Using HI-POWER LED, illumination is 3 times more than conventional coaxial lights.
2. Window mirror increases light transmittance and reduce light reflection.
3. Beam splitter reduces image shift(ghosting), improves resolution, and supports high-resolution camera.
4. Equipped with a high-directivity optical mode, to suppress light diffusion
5. Equipped with a high-directivity optical film, to have greatly improved brightness.
6. Suitable for the test object with high reflection mirror characteristics.
7. No blurred grayscale gradient that affects the accuracy.
8. Ability to suppress surface reflection to make damages on the surface to clear images.

Major applications

1. Inspection of highly reflective surfaces, such as wafers, metal surfaces, film, liquid crystals and glass.
2. Imprint check
3. Inspection of pattern of printed boards.

Available Models

Model	Color	Power Consumption	Weight (g)	Dimension
GL-DIFV2-40R-24	●	24V/7.2W		
GL-DIFV2-40W/B/G-24	○●●	24V/7.2W	184	1
GL-DIFV2-40IR-24	●	24V/7.2W		
GL-DIFV2-50R-24	●	24V/12W		
GL-DIFV2-50W/B/G-24	○●●	24V/11.52W	260	2
GL-DIFV2-50IR-24	●	24V/12W		
GL-DIFV2-70R-24	●	24V/24W		
GL-DIFV2-70W/B/G-24	○●●	24V/21.6W	580	3
GL-DIFV2-70IR-24	●	24V/24W		
GL-DIFV2-100R-24	●	24V/19W		
GL-DIFV2-100W/B/G-24	○●●	24V/28.8W	885	4
GL-DIFV2-100IR-24	●	24V/19W		

Model explanation

GL-DIFV2-□□○

- Color
- Dimension of the square emitting surface

Luminous intensity distribution characteristics

Illuminate Height : 5CM,10CM,15CM

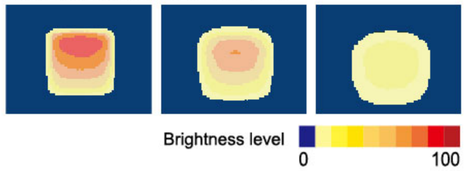

Dimensional Diagrams(mm)

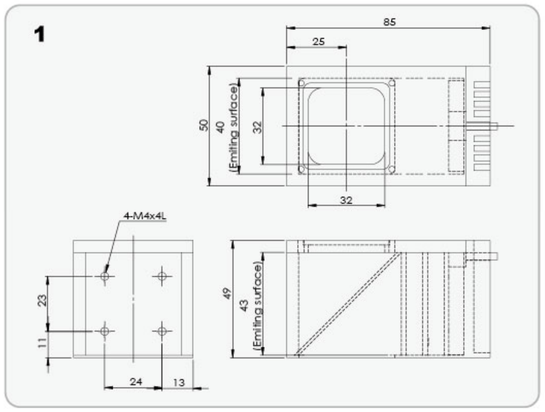

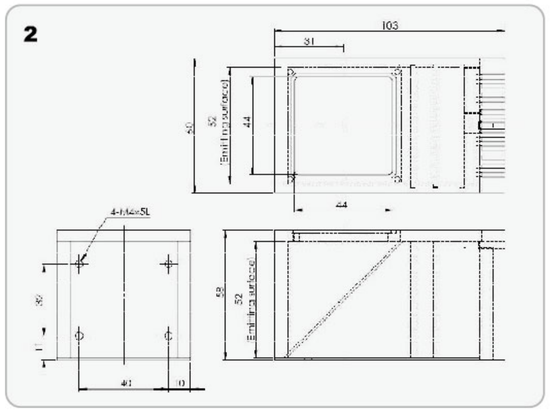

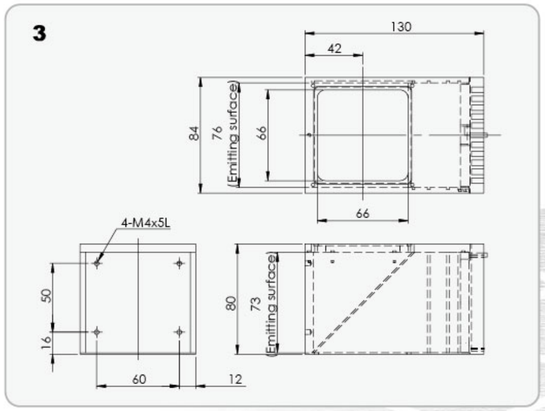

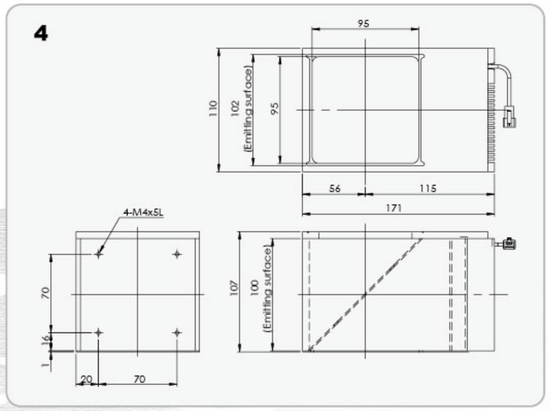

Angle Coaxial Lights

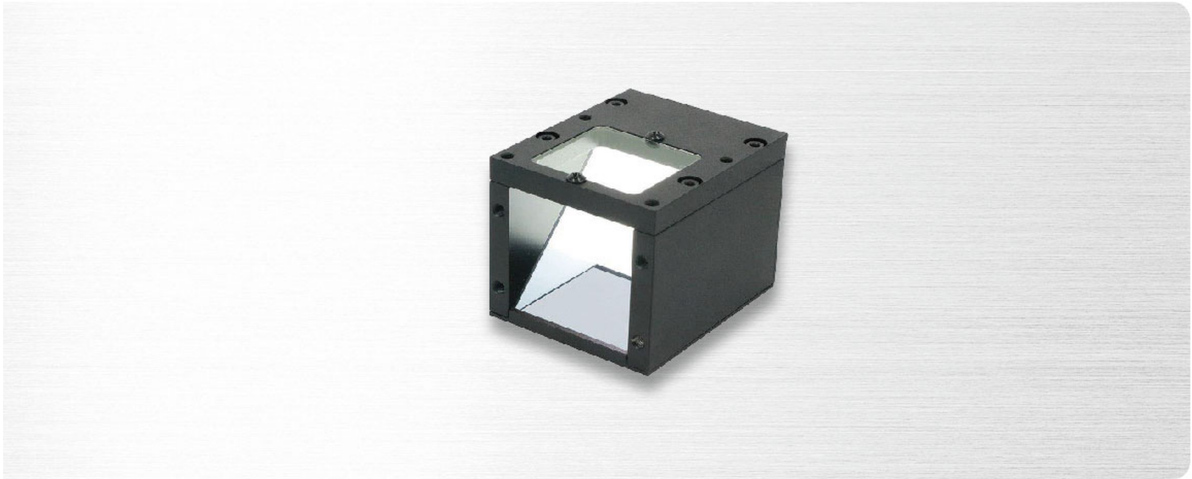

Outline

Diffused light from the LED is illuminated on the same axis as the camera axis. Light outlet direction changes from vertical to horizontal.

Feature

1. High-precision optical glass will increase the light transmittance and resolution.
2. Prevent ghost images and reflected light.
3. Allow high-resolution imaging.
4. Inspection of reflective materials.

Major applications

1. Inspection of highly reflective surfaces, such as wafers, metal surfaces, film, liquid crystals and glass.
2. Imprint check
3. Inspection of pattern of printed boards.

Model explanation

GL-IFV □□○ 90D-24

- Color
- Dimension of the square emitting surface

Available Models

Model	Color	Power Consumption	Weight (g)	Dimension
GL-IFV34R-90D-24	●	24V/2.4W	126	1
GL-IFV34W/B/G-90D-24	○●●	24V/3.84W		
GL-IFV58R-90D-24	●	24V/2.7W	420	2
GL-IFV58W/B/G-90D-24	○●●	24V/4.03W		

Dimensional Diagrams(mm)

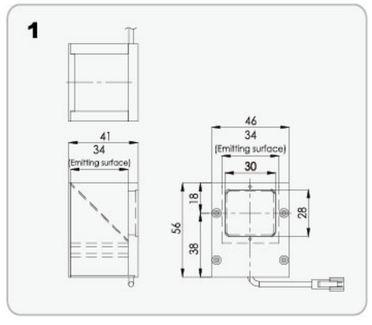

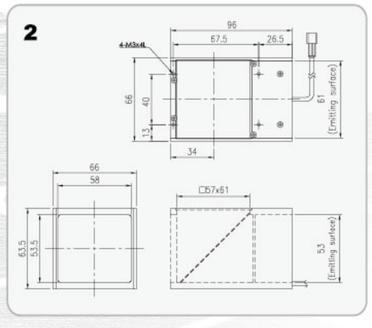

Flat Dome Lights

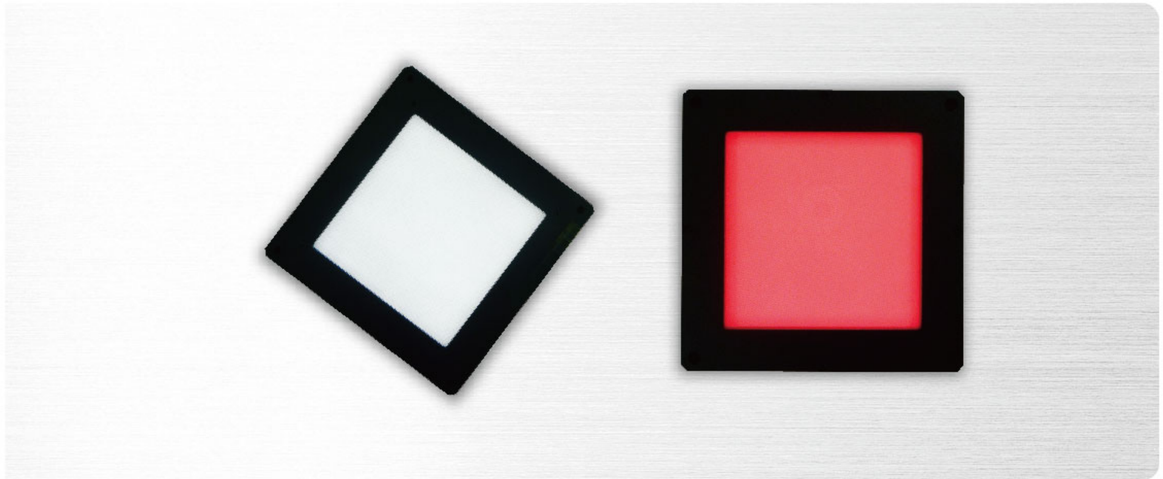

Outline

Thickness of 10mm, providing shadowless lighting effects.

Feature

1. Thickness of 10mm, providing hemispherical light effects.
2. Light and thin design for easy installation
3. Suitable for high reflection specular objects.

Major applications

1. Inspection of the printing on the bottoms of aluminum cans or batteries
2. Inspection of the circuit of PCB
3. Inspection of the keyboard of mobile phone
4. Inspection of reflective materials

Model explanation

GL-FDO □□□○

- Color
- Dimension of the square emitting surface

Available Models

Model	Color	Power Consumption	Weight (g)	Dimension
GL-FDO50R-24	●	24V/0.66W	145	1
GL-FDO50W/B/G-24	○●●	24V/0.99W		
GL-FDO100R-24	●	24V/3.84W	271	2
GL-FDO100W/B/G-24	○●●	24V/5.76W		
GL-FDO100IR-24	●	24V/3.84W		
GL-FDO200R-24	●	24V/12.09W	540	3
GL-FDO200W/B/G-24	○●●	24V/17.28W		

Imaging examples

GL-FDO100R COKE CAN | **GL-FDO100R** KEYPAD | **GL-FDO100W** BAT | **GL-FDO100W** PCB

Dimensional Diagrams(mm)

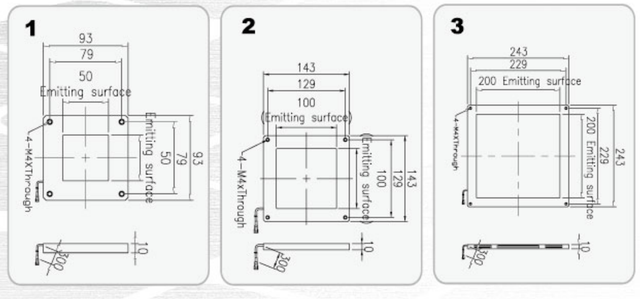

NEW High Intensity Flat Dome Lights

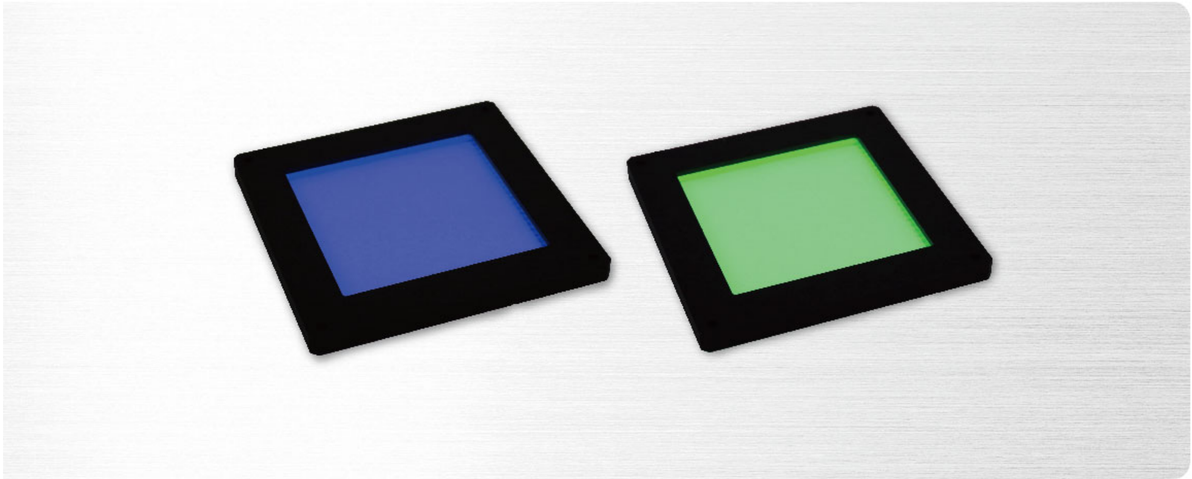

Outline

Thickness of 10mm, providing shadowless lighting effects.

Feature

1. Thickness of 10mm, providing hemispherical light effects.
2. Using HI-POWER LED, brightness is 5 times more than conventional lighting.
3. Suitable for high reflection specular objects.

Major applications

1. Inspection of the printing on the bottoms of aluminum cans or batteries
2. Inspection of the circuit of PCB
3. Inspection of the keyboard of mobile phone.
4. Inspection of reflective materials

Model explanation

GL-FDO2-□□□○

- Color
- Dimension of the square emitting surface

Available Models

Model	Color	Power Consumption	Weight (g)	Dimension
GL-FDO2-50R-24	●	24V/7.48W		
GL-FDO2-50W/B/G-24	○●●	24V/8.98W	145	1
GL-FDO2-50IR-24	●	24V/7.48W		
GL-FDO2-100R-24	●	24V/11.23W		
GL-FDO2-100W/B/G-24	○●●	24V/13.25W	271	2
GL-FDO2-100IR-24	●	24V/11.23W		

Imaging examples

FDO2

FDO

Dimensional Diagrams(mm)

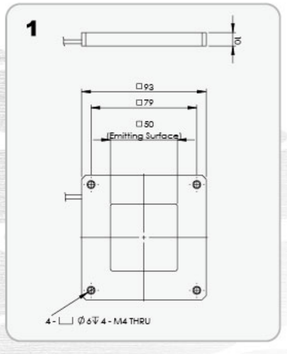

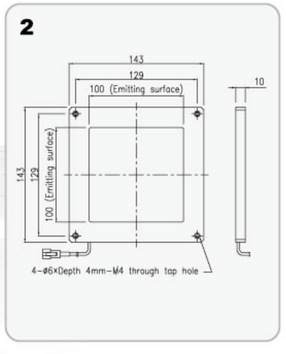

Spot Lights

Outline

Collecting optics by used light guides to maximum spot luminance, Compatible with macro lenses.

Feature

1. Inspection of positioning fit, reflective and small objectives.
2. HLV2-6040 series are 5 times brighter than HLV series.

Major applications

1. Coaxial lighting for highly reflective surfaces, such as wafers, metal surfaces, liquid-crystal and GL-H glass material.
2. Mounted on movable modules.

Model explanation

GL-LV-□□○ – Color
- Spot Diameter

GL-HLV△-□□○ — Color
- Spot Diameter
- Version

GL-HLV□□○ – Color
- Spot Diameter

Available Models

Model	Color	Power Consumption	Weight (g)	Dimension
GL-LV14R-24	●	24V/0.3W		
GL-LV14W/B/G-24	○●●	24V/0.3W	16	1
GL-LV14IR-24	●	24V/0.3W		
GL-HLV28W-24	○	24V/1.0W	39	2
GL-HLV28R	●	350mA/1.0W		
GL-HLV28W/B/G	○●●	350mA/1.0W	39	3
GL-HLV28IR	●	350mA/1.0W		
GL-HLV2-28R	●	350mA/1.0W	65	4
GL-HLV2-28W/B/G	○●●	350mA/1.0W		
GL-HLV2-24R-3W	●	700mA/3W	153	5
GL-HLV2-24W/B/G-3W	○●●	700mA/3W		
GL-HLV2-6040R-5W	●	1300mA/5W	113	6
GL-HLV2-6040W/B/G-5W	○●●	1300mA/5W		
GL-HLV3-24R	●	500mA/2.0W	40	7
GL-HLV3-24W/B/G	○●●	500mA/2.0W		

Constant Current Power Supply NEW

Available Models

LED Model	Power Model	Power Requirement	Output	Connector	External Control	Dimension	Weight(g)
GL-HLV28	GLC-DPI2-135	AC100V~AC240V	350mA	SMP-03V*1	RS-232	8	580
GL-HLV2-28							
GL-HLV3-24	GLC-DPI2-150		500mA				
GL-HLV2-24-3W	GLC-DPI2-170		700mA				
GL-HLV2-6040W-5W	GLC-DPI2-1130		1300mA				

Available Models

Model	Power Requirement	Output	Connector	External Control	Dimension	Weight(g)
GLC-DPI235-RS232	AC100V~AC240V	350mA	SMP-03V*2	RS232	9	1030
GLC-DPI250-RS232	AC100V~AC240V	500mA				
GLC-DPI270-RS232	AC100V~AC240V	700mA				
GLC-DPI2130-RS232	AC100V~AC240	1300mA				
GLC-DPI435-RS232	AC100V~AC240V	350mA	SMP-03V*4	RS232	10	1540
GLC-DPI450-RS232	AC100V~AC240V	500mA				
GLC-DPI470-RS232	AC100V~AC240V	700mA				
GLC-DPI4130-RS232	AC100V~AC240	1300mA				

Dimensional Diagrams(mm)

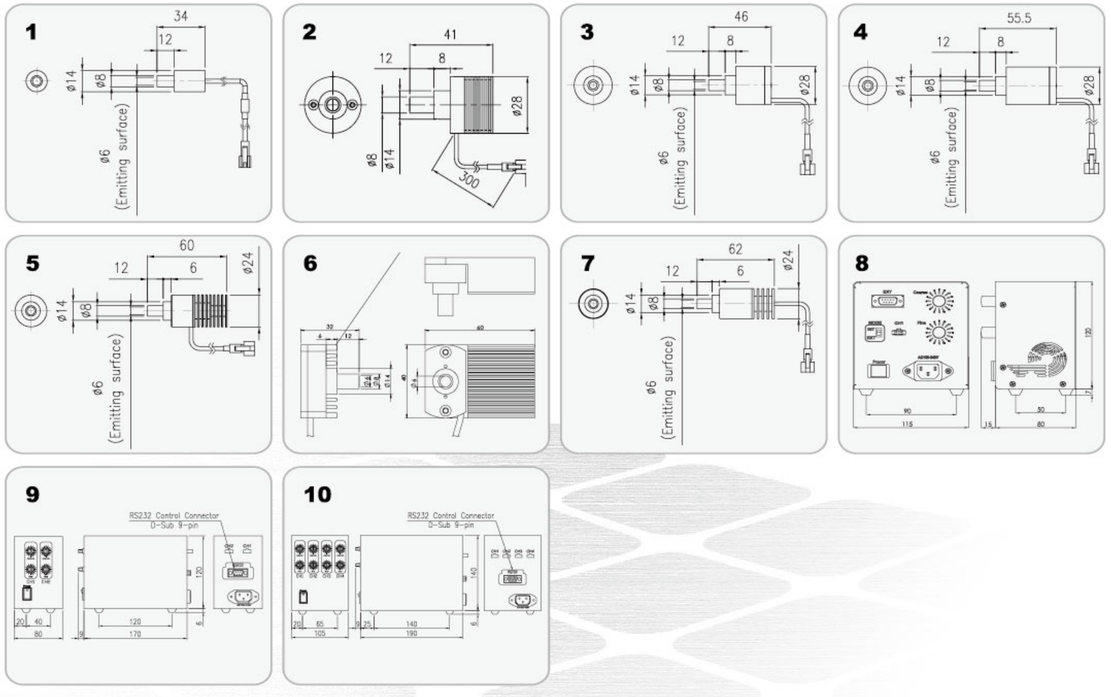

NEW RGB Spotlights

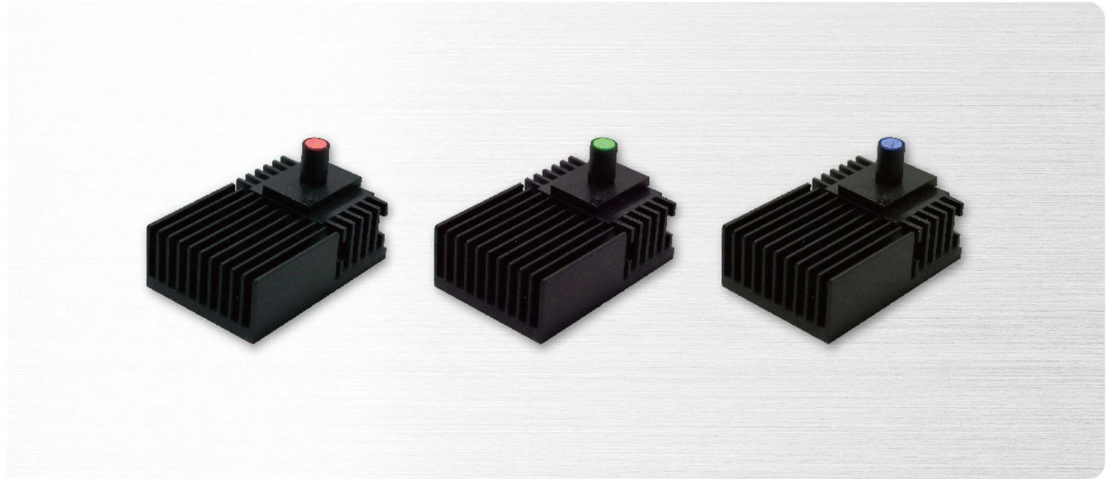

Outline

Used with a coaxial telecentric lens, a special optical design to illuminate a high-brightness spot light source.

Feature

1. It can adjust and control three kinds of light source lighting independently (Lighting colors: RGB)
2. Different colors can be adjusted according to detection conditions.
3. Light up the three primary colors of R, G, and B mixed to emit light, yellow, light blue, pink and other light colors are all. The ideal illumination light can be easily prepared.
4. Suitable for positioning and fitting with highly reflective mirrors and small-sized measured objects.
5. To save valuable man-hours for replacing other light sources.
6. Suitable for laboratory lighting evaluation cases.

Applications

1. Inspection for easily reflective objects such as wafers, metal surfaces, film rolls, liquid crystals and glass.
2. Installation in removable modules

Available Models

Model	Color	Power Consumption	Weight (g)	Dimension
GL-HLV2-6040RGB	●●●	0.35A/10.08W	113	1

Model explanation

GL-HLV2-□□□△△○○○

- Color
- Internal diameter of the ring
- External diameter of the ring

Dimensional Diagrams(mm)

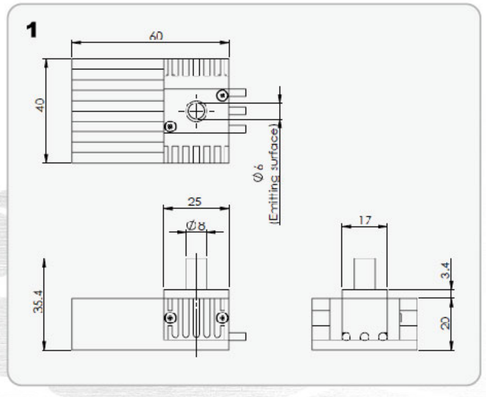

Telecentric Lens

- Compatible with 2MP sensors on 2/3" cameras
- A wide variety of magnification options available
  (65mm WD - 0.5x, 0.8x, 1.0x, 2.0x, 110mm WD - 0.3x, 0.5x, 0.8x, 1.0x, 1.5x, 2.0x) which include coaxial models
- Low TV distortion correction to the furthest corner (0.01 ~ 0.03s%)

WD-65mm

ALN-TEC-MO565MPC / ALN-TEC-MO565MP

Model (with coaxial type)	ALN-TEC-MO565MPC
Model (straight type)	ALN-TEC-MO565MP
Format	2/3" ϕ11mm
Magnification	0.5x
Working Distance	65.5mm
Resolving Power *1	12um
Depth of Field *2	2.87mm
NA	0.028
Effective F number	9
TV Distortion	-0.012%

Field of View	2/3inch	17.6 x 13.2mm
	1/1.8inch	14.35 x 10.64mm
	1/2inch	12.8 x 9.6mm
	1/3inch	9.6 x 7.2mm
Mount		C-mount
Weight (with coaxial type)		80g
Weight (straight type)		77g

ALN-TEC-MO565MPC

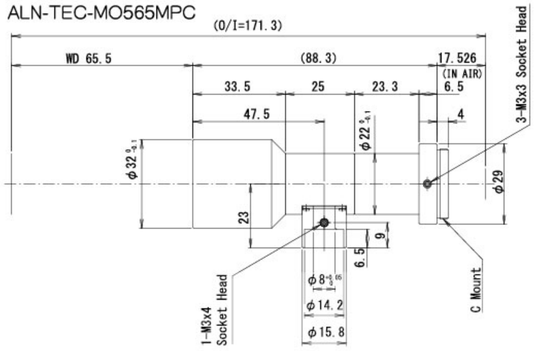

ALN-TEC-MO565MP

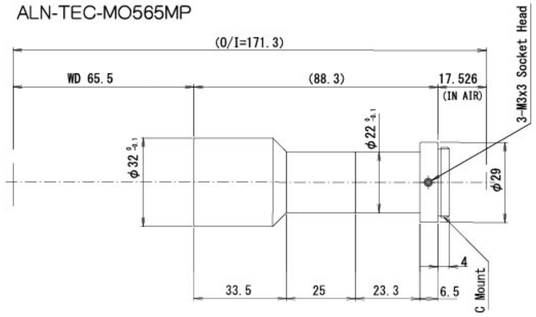

ALN-TEC-MO865MPC / ALN-TEC-MO865MP

Model (with coaxial type)	ALN-TEC-MO865MPC
Model (straight type)	ALN-TEC-MO865MP
Format	2/3" ϕ11mm
Magnification	0.8x
Working Distance	66mm
Resolving Power *1	8um
Depth of Field *2	1.18mm
NA	0.042
Effective F number	9.4
TV Distortion	0.008%

Field of View	2/3inch	11 x 8.25mm
	1/1.8inch	8.97 x 6.65mm
	1/2inch	8 x 6mm
	1/3inch	6 x 4.5mm
Mount		C-mount
Weight (with coaxial type)		62g
Weight (straight type)		57g

ALN-TEC-MO865MPC

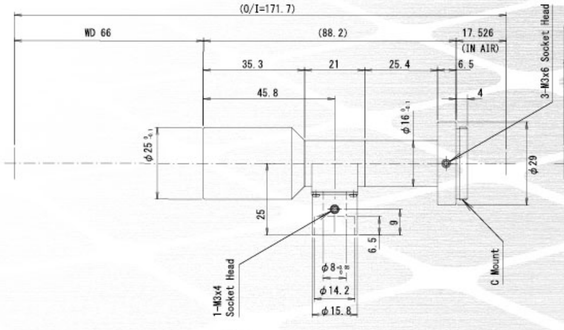

ALN-TEC-MO865MP

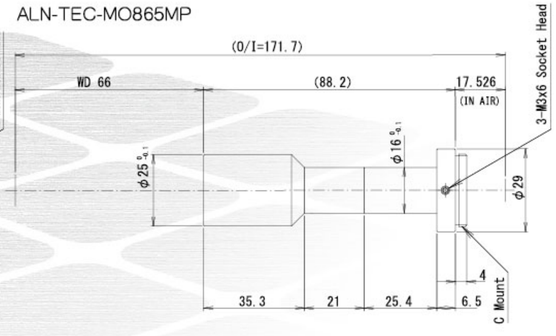

＊1 :Theoretical resolution calculated with a wavelength of 550nm
＊2 :Value calculated with a permissible circle of confusion of 40μm

WD-65mm

ALN-TEC-M1065MPC / ALN-TEC-M1065MP

Model (with coaxial type)	ALN-TEC-M1065MPC
Model (straight type)	ALN-TEC-M1065MP
Format	2/3" ϕ11mm
Magnification	1x
Working Distance	65.5mm
Resolving Power *1	6.7um
Depth of Field *2	0.79mm
NA	0.05
Effective F number	9.8
TV Distortion	-0.022%

Field of View	2/3inch	8.8 x 6.6mm
	1/1.8inch	7.18 x 5.32mm
	1/2inch	6.4 x 4.8mm
	1/3inch	4.8 x 3.6mm
Mount		C-mount
Weight (with coaxial type)		54g
Weight (straight type)		49g

ALN-TEC-M1065MPC

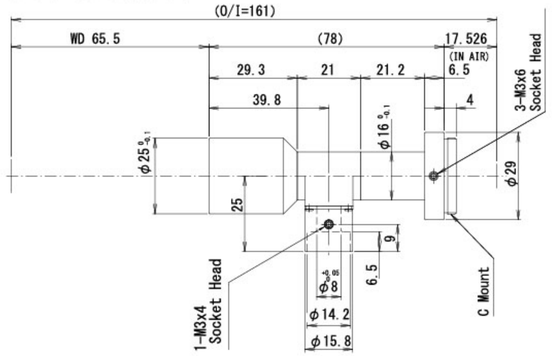

ALN-TEC-M1065MP

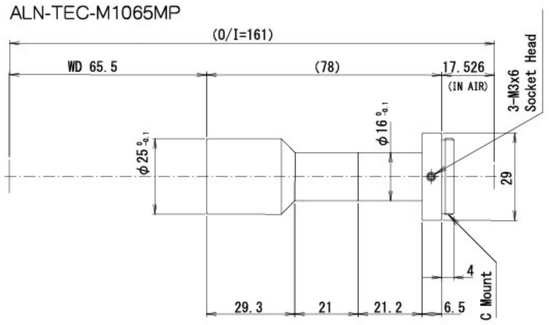

WD-65mm

ALN-TEC-M2065MPC / ALN-TEC-M2065MP

Model (with coaxial type)	ALN-TEC-M2065MPC
Model (straight type)	ALN-TEC-M2065MP
Format	2/3" ϕ11mm
Magnification	2x
Working Distance	65.4mm
Resolving Power *1	4.4um
Depth of Field *2	0.26mm
NA	0.076
Effective F number	12.8
TV Distortion	0.020%

Field of View	2/3inch	4.4 x 3.3mm
	1/1.8inch	3.59 x 2.66mm
	1/2inch	3.2 x 2.4mm
	1/3inch	2.4 x 1.8mm
Mount		C-mount
Weight (with coaxial type)		55g
Weight (straight type)		49g

ALN-TEC-M2065MPC

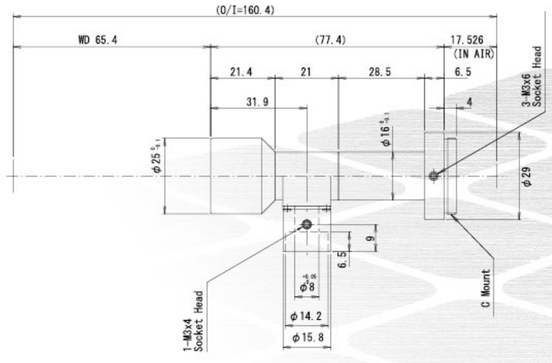

ALN-TEC-M2065MP

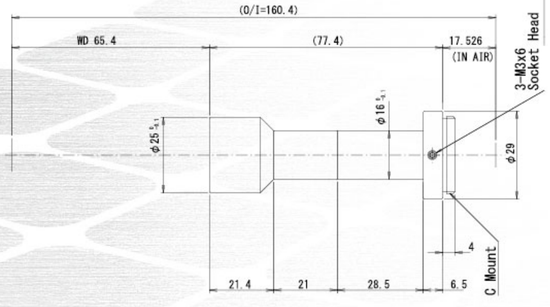

＊1 :Theoretical resolution calculated with a wavelength of 550nm
＊2 :Value calculated with a permissible circle of confusion of 40μm

WD-110mm

ALN-TEC-M05110MPC / ALN-TEC-M05110MP

Model (with coaxial type)	ALN-TEC-M05110MPC
Model (straight type)	ALN-TEC-M05110MP
Format	2/3" φ11mm
Magnification	1.5x
Working Distance	110.7mm
Resolving Power *1	5.2um
Depth of Field *2	0.42mm
NA	0.064
Effective F number	11.5
TV Distortion	0.031%

Field of View	2/3inch	5.87 x 4.4mm
	1/1.8inch	4.79 x 3.55mm
	1/2inch	4.27 x 3.2mm
	1/3inch	3.2 x 2.4mm
Mount		C-mount
Weight (with coaxial type)		110g
Weight (straight type)		108g

ALN-TEC-M05110MPC

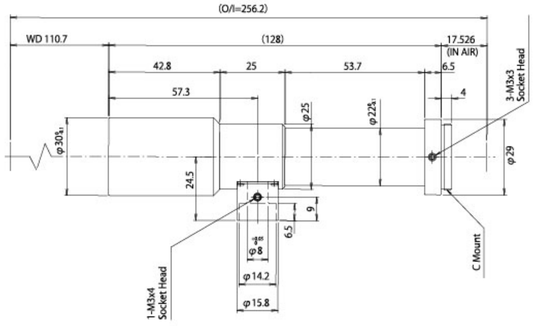

ALN-TEC-M05110MP

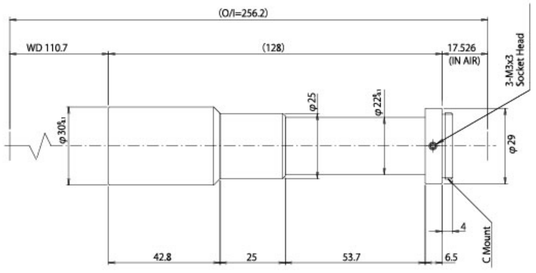

WD-110mm

ALN-TEC-M10110MPC / ALN-TEC-M10110MP

Model (with coaxial type)	ALN-TEC-M10110MPC
Model (straight type)	ALN-TEC-M10110MP
Format	2/3"φ11mm
Magnification	1x
Working Distance	111.5mm
Resolving Power *1	6.9um
Depth of Field *2	0.82mm
NA	0.049
Effective F number	10.1
TV Distortion	-0.003%

Field of View	2/3inch	8.8 x 6.6mm
	1/1.8inch	7.18 x 5.32mm
	1/2inch	6.4 x 4.8mm
	1/3inch	4.8 x 3.6mm
Mount		C-mount
Weight (with coaxial type)		108g
Weight (straight type)		105g

ALN-TEC-M10110MPC

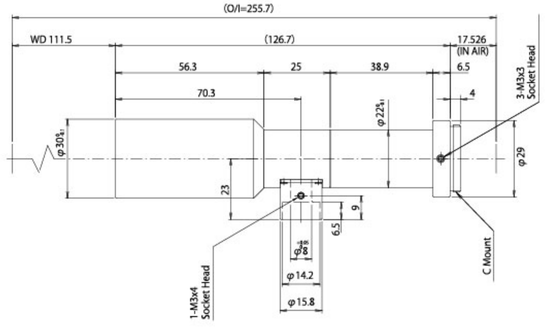

ALN-TEC-M10110MP

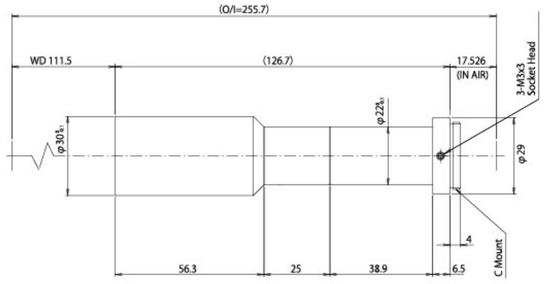

＊1 :Theoretical resolution calculated with a wavelength of 550nm
＊2 :Value calculated with a permissible circle of confusion of 40μm

WD-110mm

ALN-TEC-M08110MPC / ALN-TEC-M08110MP

Model (with coaxial type)	ALN-TEC-M08110MPC
Model (straight type)	ALN-TEC-M08110MP
Format	2/3"φ11mm
Magnification	0.8x
Working Distance	111mm
Resolving Power *1	8.8um
Depth of Field *2	1.31mm
NA	0.038
Effective F number	10.2
TV Distortion	-0.027%

Field of View	2/3inch	11 x 8.25mm
	1/1.8inch	8.97 x 6.65mm
	1/2inch	8 x 6mm
	1/3inch	6 x 4.5mm
Mount		C-mount
Weight (with coaxial type)		106g
Weight (straight type)		103g

ALN-TEC-M08110MPC

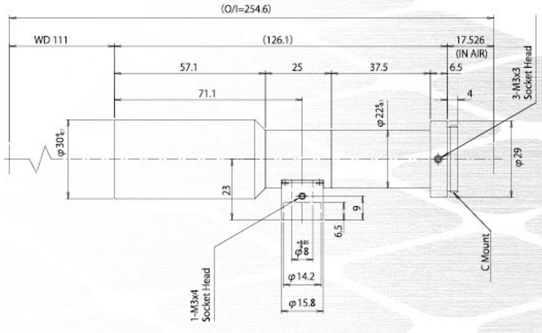

ALN-TEC-M08110MP

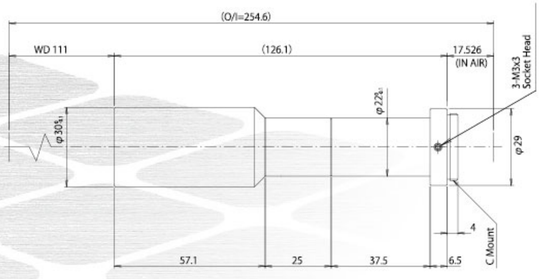

WD-110mm

ALN-TEC-M20110MPC / ALN-TEC-M20110MP

Model (with coaxial type)	ALN-TEC-M08110MPC
Model (straight type)	ALN-TEC-M08110MP
Format	2/3" φ11mm
Magnification	2x
Working Distance	110.9mm
Resolving Power *1	4.5um
Depth of Field *2	0.27mm
NA	0.075
Effective F number	13
TV Distortion	-0.019%

Field of View	2/3inch	4.4 x 3.3mm
	1/1.8inch	3.59 x 2.66mm
	1/2inch	3.2 x 2.4mm
	1/3inch	2.4 x 1.8mm
Mount		C-mount
Weight (with coaxial type)		115g
Weight (straight type)		113g

ALN-TEC-M20110MPC

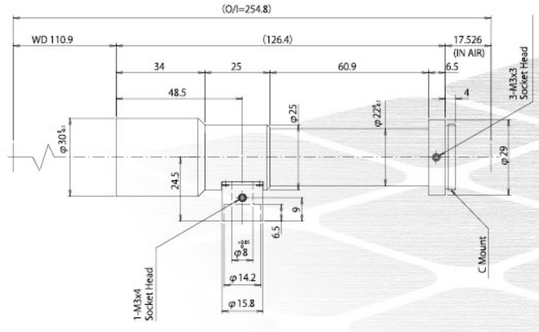

ALN-TEC-M20110MP

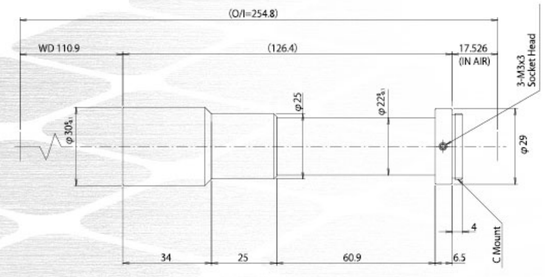

＊1 :Theoretical resolution calculated with a wavelength of 550nm
＊2 :Value calculated with a permissible circle of confusion of 40μm

Large Dome Lights

Outline

Using the hemispherical shape reflective surface can evenly diffuse the diffused light, ADO series can present a better edge for uneven shape objects with high reflectivity.

Feature

1. More than 10 different models for ψ45~ψ260.
2. DO2 series are high intensity lights, providing lighting evenly despite lighting distance change.
3. Use with the IFV series can provide the better image. Inspection of reflective materials.

Major applications

1. Inspection of the print on the bottom of aluminum cans
2. Curved metal surfaces and similar surfaces
3. Surface inspection, surface printing inspection
4. Any metal surface inspection, ex. Stainless surface scratch inspection

Model explanation

GL-DO □□△△○
- Color
- Internal diameter of the ring
- External diameter of the ring

GL-ADO □□△△○
- Color
- Internal diameter of the ring
- External diameter of the ring

Available Models

Model	Color	Power Consumption	Weight (g)	Dimension
GL-DO8454R-24	●	24V/3.9W	92	1
GL-DO8454W/B/G-24	○●●	24V/5.8W		
GL-DO8454IR-24	●	24V/3.9W		
GL-DO12292R-24	●	24V/6.3W	170	2
GL-DO12292W/B/G-24	○●●	24V/9.4W		
GL-DO12292IR-24	●	24V/6.3W		
GL-DO156108R-24	●	24V/7.2W	255	3
GL-DO156108W/B/G-24	○●●	24V/10.56W		
GL-DO156108IR-24	●	24V/7.2W		
GL-DO266210R-24	●	24V/18.24W	685	4
GL-DO266210W/B/G-24	○●●	24V/27.36W		
GL-DO266210IR-24	●	24V/18.24W		
GL-DO2-4529R-24	●	24V/1.44W	32	5
GL-DO2-8454R-24	●	24V/2.64W	92	1
GL-DO2-8454W/B/G-24	○●●	24V/4.56W		
GL-DO2-12292R-24	●	24V/4.6W	170	2
GL-DO2-12292W/B/G-24	○●●	24V/8.92W		
GL-DO2-156108R-24	●	24V/5.28W	255	3
GL-DO2-156108W/B/G-24	○●●	24V/11.04W		
GL-ADO8454R-24	●	24V/5.76W	157	6
GL-ADO8454W/B/G-24	○●●	24V/8.64W		
GL-ADO8454IR-24	●	24V/5.76W		
GL-ADO12292R-24	●	24V/9.12W	265	7
GL-ADO12292W/B/G-24	○●●	24V/13.44W		
GL-ADO12292IR-24	●	24V/9.12W		

Model explanation

GL-DOC □□△△○
- Color
- Internal diameter of the ring
- External diameter of the ring

Model	Color	Power Consumption	Weight (g)	Dimension
GL-ADO156108R-24	●	24V/11.04W	450	8
GL-ADO156108W/B/G-24	○●●	24V/16.32W		
GL-ADO156108IR-24	●	24V/11.04W		
GL-DOC215180R	●	12V/11.6W	935	9
GL-DOC215180W/B/G	○●●	12V/17.3W		
GL-DOC215180IR	●	12V/11.6W		

Imaging examples

GL-DO156108R
Cross Screw

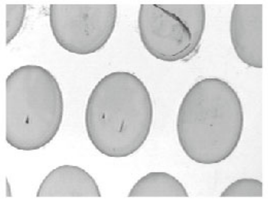

GL-DO156108R
Medicine Pill Package

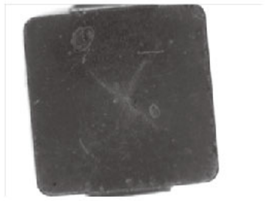

GL-DO156108W
Iron Powder Surface

GL-DO156108W
Aluminum cans

Luminous intensity distribution characteristics

GL-DO156108R Graph

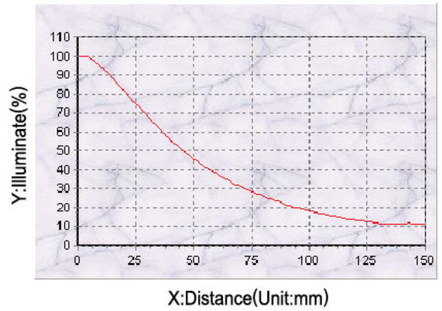

Illuminate Height:5CM,10CM,15CM

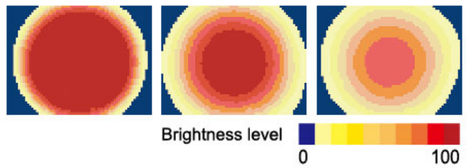

Dimensional Diagrams(mm)

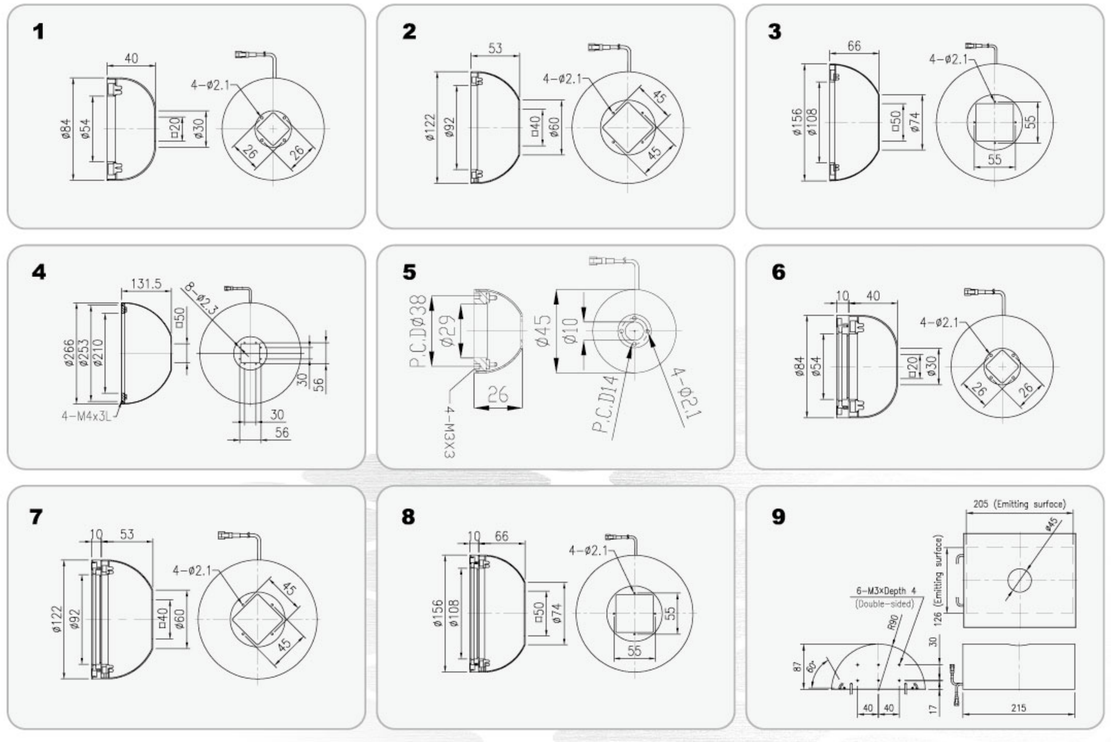

Low Angle Square Lights

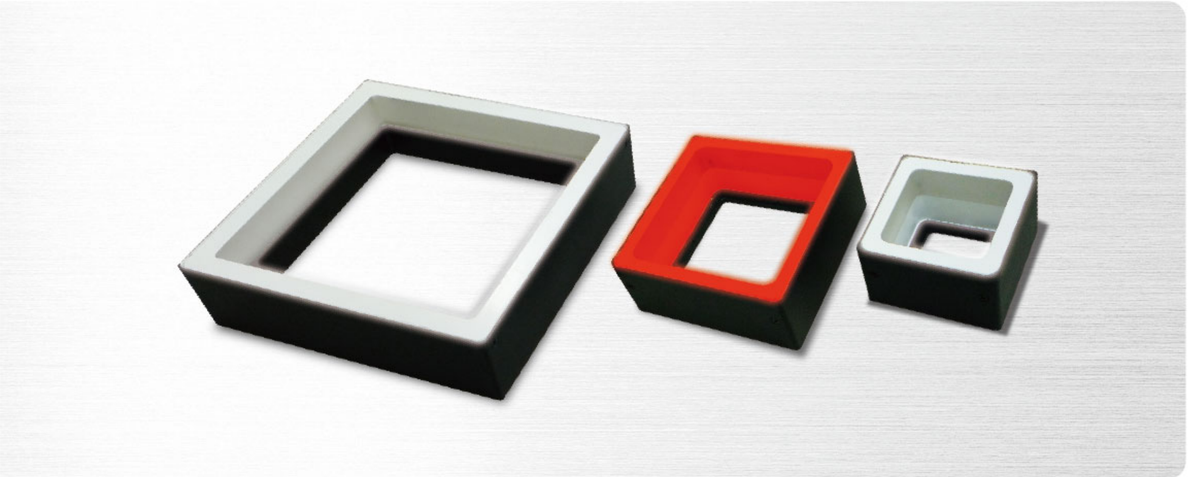

Outline

The diffused light emitted by the square low-angle oblique light can be used to solve the problem that the ring light source cannot illuminate the contours of the four corners.

Feature

1. Provide lighting evenly from top.
2. Provide shadowless illumination from the four angles.
3. Ability to evenly diffused inspection and provide shadowless lighting with diffuser
4. Best choice of square inspection objectives.

Major applications

1. IC wafer inspection & substrate part inspection
2. Inspection from the side and to emerge from internal surfaces of object for stain
3. Visual inspection of wafers
4. Solder inspection& connector pitch inspection

Model explanation

GL-FPQ□□ △△○ — Color
- Dimension of the width
- Dimension of the length

Available Models

Model	Color	Power Consumption	Weight (g)	Dimension
GL-FPQ4848R-24	●	24V/1.5W		
GL-FPQ4848W/B/G-24	○●●	24V/2.0W	50	1
GL-FPQ4848IR-24	●	24V/1.5W		
GL-FPQ7575R-24	●	24V/2.4W		
GL-FPQ7575W/B/G-24	○●●	24V/3.4W	92	2
GL-FPQ7575IR-24	●	24V/2.4W		
GL-FPQ9696W/B/G-24	○●●	24V/3.3W	103	3
GL-FPQ142142W/B/G-24	○●●	24V/5.3W	154	4
GL-FPQ152152R-24	●	24V/4.8W		
GL-FPQ152152W/B/G-24	○●●	24V/7.2W	258	5
GL-FPQ152152IR-24	●	24V/4.8W		

Luminous intensity distribution characteristics

GL-FPQ152152W Graph

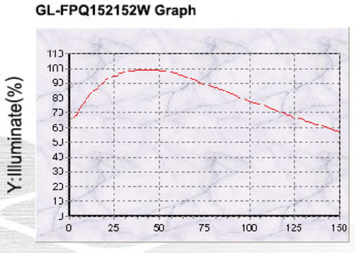

Illuminate Height:5CM,10CM,15CM

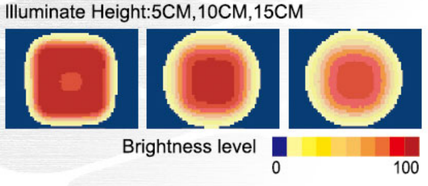

Dimensional Diagrams(mm)

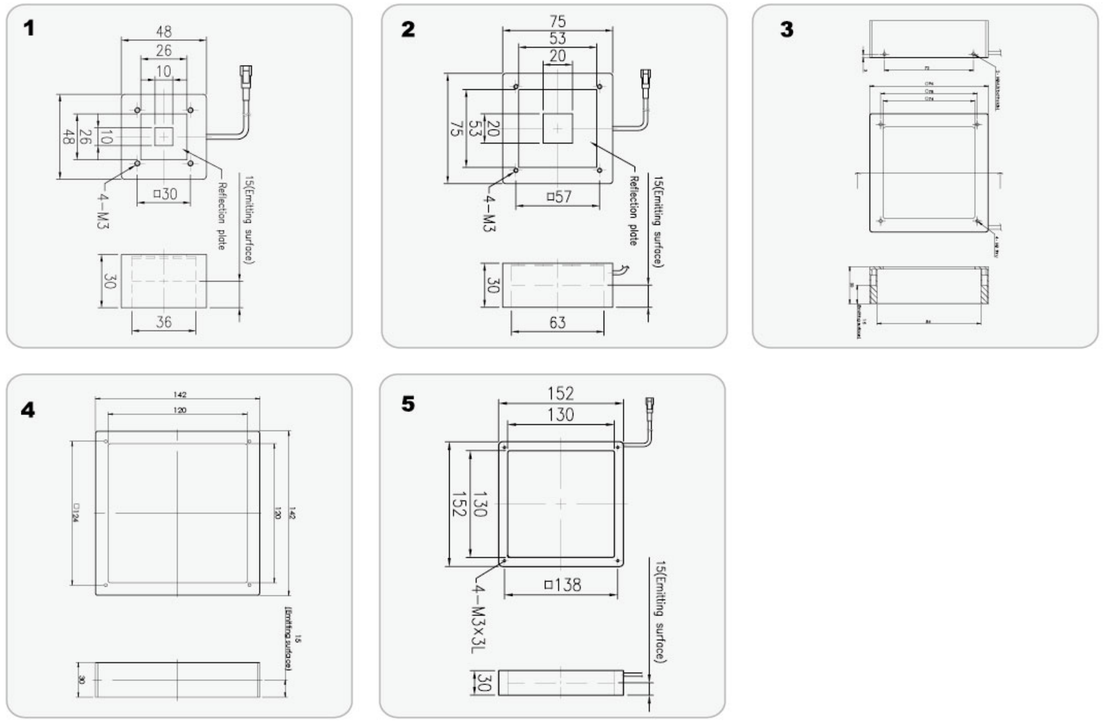

Flat Square Lights

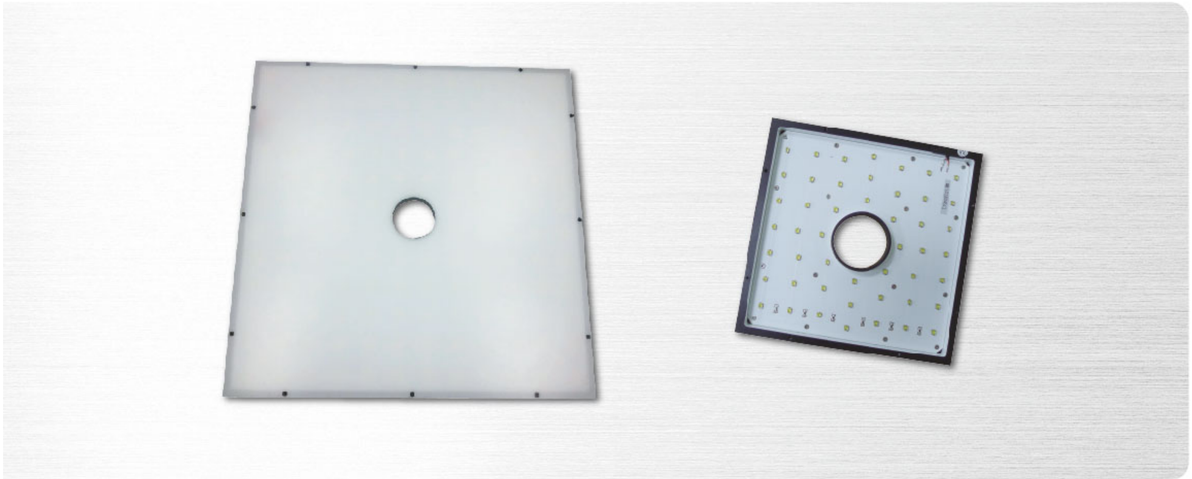

Outline

With hollow design, diffused light is evenly radiated in the coaxial direction with the camera.

Feature

1. Not suitable for background light sources.
2. Applicable to the measured object of a wide range of appearance and large size.

Major applications

1. Robots, ex: motor parts spot welding. placing wafer.
2. Multiple outline inspection.

Available Models

Model	Color	Power Consumption	Weight (g)	Dimension
GL-DSQ2-150150R-24	●	24V/17.28W	404	1
GL-DSQ2-150150W/B/G-24	○●●	24V/25.92W		
GL-DSQ2-208208R-24	●	24V/28.8W	783	2
GL-DSQ2-208208W/B/G-24	○●●	24V/43.2W		
GL-DSQ2-300300R-24	●	24V/51.84W	1457	3
GL-DSQ2-300300W/B/G-24	○●●	24V/77.76W		

Model explanation

GL-DSQ2-□□□△△△○

- Color
- Dimension of the width
- Dimension of the length

Dimensional Diagrams(mm)

1

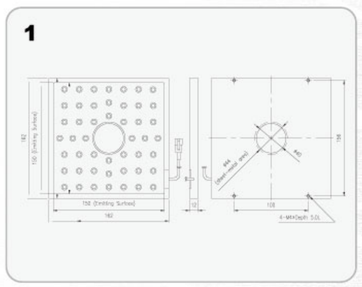

2

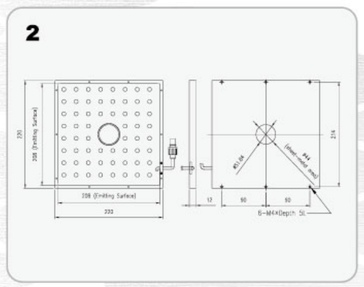

3

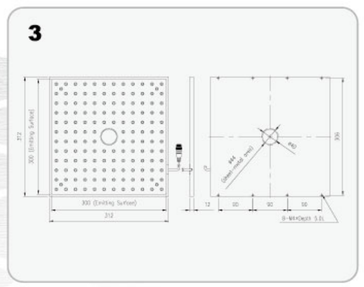

NEW High Directivity Square Lights

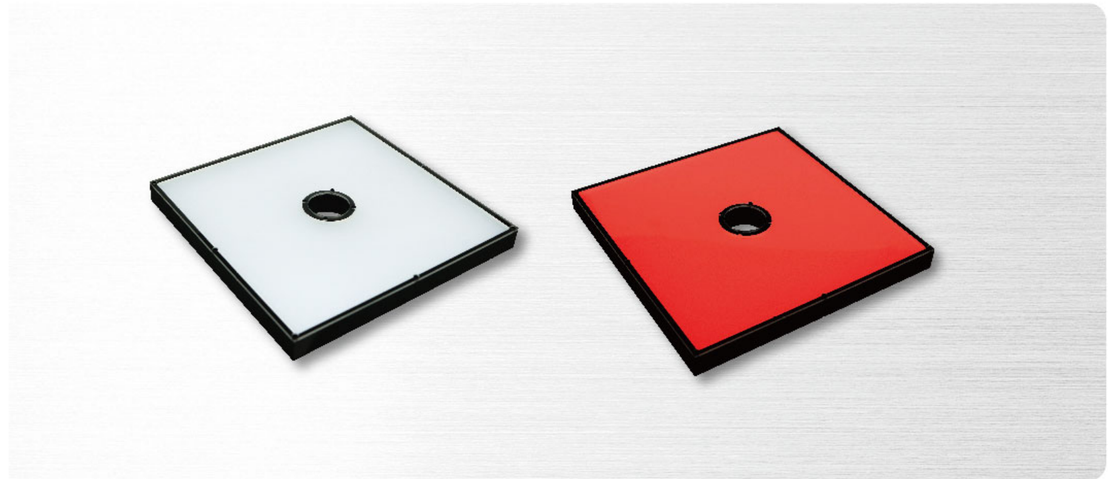

Outline

The square planar light is combined with the hollow design to uniformly irradiate high-directional light in the direction coaxial with the camera.

Feature

1. Equipped with a high-directivity optical mode, it can suppress the diffusion of light. Its illumination is twice more than DSQ2.
2. High-directional square hollow light can make the measured object's outline and outline edge contrast clear
3. No blurred gray scale gradients affect the focus, causing misjudgment and affecting accuracy.
4. Suitable for the detection of objects with a wide range of appearance and large size.

Major applications

1. Robots, ex: motor parts spot welding. placing wafer.
2. Multiple outline inspection.

Available Models

Model	Color	Power Consumption	Weight (g)	Dimension
GL-DDSQ150150R-24	●	24V/11.8W		
GL-DDSQ150150W/B/G-24	○●●	24V/14.7W	404	1
GL-DDSQ150150IR-24	●	24V/11.8W		
GL-DDSQ208208R-24	●	24V/28.8W		
GL-DDSQ208208W/B/G-24	○●●	24V/35.3W	783	2
GL-DDSQ208208IR-24	●	24V/28.8W		
GL-DDSQ300300R-24	●	24V/52W		
GL-DDSQ3003000W/B/G-24	○●●	24V/63.4W	1457	3
GL-DDSQ300300IR-24	●	24V/52W		

Model explanation

GL-DDSQ□□□△△△○

- Color
- Dimension of the width
- Dimension of the length

Dimensional Diagrams(mm)

1

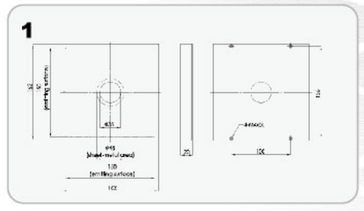

2

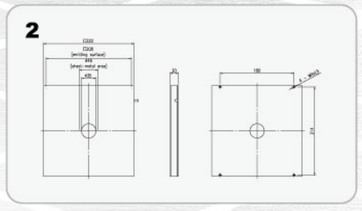

3

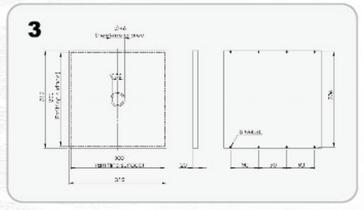

Backlights

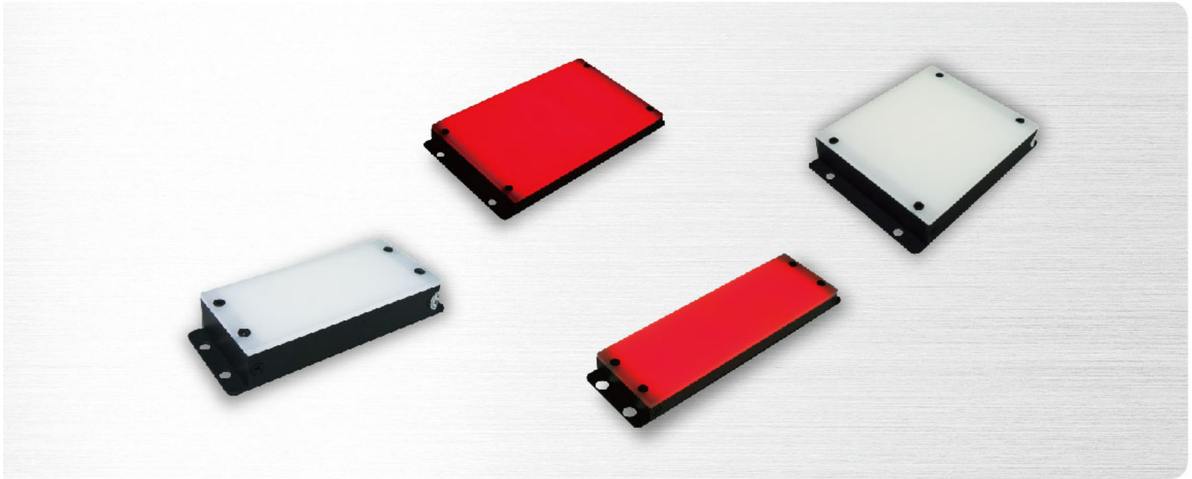

Outline

Ability to diffuse light evenly, made with 30mm×30mm & 45mm×45mm modules.

Feature

1. Provide 222 types of models to meet customers' needs.
2. Inspection of dimensional measurement and edge detection.

Major applications

1. Exterior visual inspection for electronic parts
2. Lead frame inspection
3. Inspection of transparent object fro stain and other particles
4. Omnigenous outline observations
5. Inspection in bend lead for GFPS, QSPs, and SOPs

Model explanation

GL-ADM□□△△○

- Color
- Dimension of the width
- Dimension of the length

Available Models

Model	Color	Power Consumption	Weight (g)	Dimension
GL-ADM3030R-24	●	24V/1.44W		1
GL-ADM3030W/B/G-24	○●●	24V/2.4W	30	2
GL-ADM3030IR-24	●	24V/1.44W		1
GL-ADM3060R-24	●	24V/2.88W		3
GL-ADM3060W/B/G-24	○●●	24V/4.8W	45	4
GL-ADM3060IR-24	●	24V/2.88W		3
GL-ADM3090R-24	●	24V/4.32W		5
GL-ADM3090W/B/G-24	○●●	24V/7.2W	60	6
GL-ADM3090IR-24	●	24V/4.32W		5
GL-ADM30120R-24	●	24V/5.76W	74	7
GL-ADM30120W/B/G-24	○●●	24V/9.6W	82	8
GL-ADM30120IR-24	●	24V/5.76W	74	7

Imaging examples

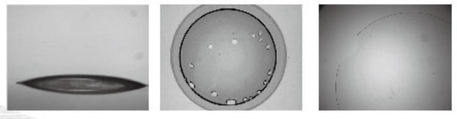

GL-ADM3030B Lateral Of Water Drop | **GL-ADM6060R** Contact lens | **GL-ADM6060W** Glass Gaps

Luminous intensity distribution characteristics

GL-ADM3030B 0CM | GL-ADM6060B 0CM | GL-ADM6060W 0CM

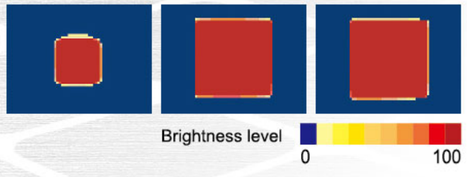

Model	Color	Power Consumption	Weight (g)	Dimension
GL-ADM60120R-24	●	24V/11.52W	136	13
GL-ADM60120W/B/G-24	○●●	24V/19.2W	149	14
GL-ADM60120IR-24	●	24V/11.52W	136	13
GL-ADM9090R-24	●	24V/12.96W		15
GL-ADM9090W/B/G-24	○●●	24V/ 21.6W	160	16
GL-ADM9090IR-24	●	24V/12.96W		15
GL-ADM90120R-24	●	24V/17.28W	197	17
GL-ADM90120W/B/G-24	○●●	24V/28.8W	216	18
GL-ADM90120IR-24	●	24V/17.28W	197	17
GL-ADM120120R-24	●	24V/23.04W	260	19
GL-ADM120120W/B/G-24	○●●	24V/38.4W	283	20
GL-ADM120120IR-24	●	24V/23.04W	260	19
GL-ADM90135R-24	●	24V/10.1W		
GL-ADM90135W/B/G-24	○●●	24V/14.2W	316	21
GL-ADM90135IR-24	●	24V/10.1W		
GL-ADM90180R-24	●	24V/13.5W		
GL-ADM90180W/B/G-24	○●●	24V/18.9W	349	22
GL-ADM90180IR-24	●	24V/13.5W		
GL-ADM90225R-24	●	24V/16.9W		
GL-ADM90225W/B/G-24	○●●	24V/23.6W	526	23
GL-ADM90225IR-24	●	24V/16.9W		
GL-ADM90270R-24	●	24V/20.2W		
GL-ADM90270W/B/G-24	○●●	24V/28.3W	631	24
GL-ADM90270IR-24	●	24V/20.2W		
GL-ADM90315R-24	●	24V/23.6W		
GL-ADM90315W/B/G-24	○●●	24V/33.0W	316	25
GL-ADM90315IR-24	●	24V/23.6W		
GL-ADM90360R-24	●	24V/26.9W		
GL-ADM90360W/B/G-24	○●●	24V/37.7W	842	26
GL-ADM90360IR-24	●	24V/26.9W		
GL-ADM135135R-24	●	24V/15.2W		
GL-ADM135135W/B/G-24	○●●	24V/21.2W	330	27
GL-ADM135135IR-24	●	24V/15.2W		
GL-ADM135180R-24	●	24V/20.2W		
GL-ADM135180W/B/G-24	○●●	24V/28.3W	420	28
GL-ADM135180IR-24	●	24V/20.2W		
GL-ADM135225R-24	●	24V/25.2W		
GL-ADM135225W/B/G-24	○●●	24V/35.3W	789	29
GL-ADM135225IR-24	●	24V/25.2W		
GL-ADM135270R-24	●	24V/30.3W		
GL-ADM135270W/B/G-24	○●●	24V/42.4W	947	30
GL-ADM135270IR-24	●	24V/30.3W		
GL-ADM135315R-24	●	24V/35.3W		
GL-ADM135315W/B/G-24	○●●	24V/49.4W	1105	31
GL-ADM135315IR-24	●	24V/35.3W		
GL-ADM135360R-24	●	24V/40.4W		
GL-ADM135360W/B/G-24	○●●	24V/56.5W	1263	32
GL-ADM135360IR-24	●	24V/40.4W		

Model	Color	Power Consumption	Weight (g)	Dimension
GL-ADM180180R-24	●	24V/26.9W		
GL-ADM180180W/B/G-24	○●●	24V/37.7W	716	33
GL-ADM180180IR-24	●	24V/26.9W		
GL-ADM180225R-24	●	24V/33.6W		
GL-ADM180225W/B/G-24	○●●	24V/47.1W	867	34
GL-ADM180225IR-24	●	24V/33.6W		
GL-ADM180270R-24	●	24V/40.4W		
GL-ADM180270W/B/G-24	○●●	24V/56.4W	1263	35
GL-ADM180270IR-24	●	24V/40.4W		
GL-ADM180315R-24	●	24V/47.1W		
GL-ADM180315W/B/G-24	○●●	24V/65.9W	1473	36
GL-ADM180315IR-24	●	24V/47.1W		
GL-ADM180360R-24	●	24V/53.8W		
GL-ADM180360W/B/G-24	○●●	24V/75.3W	1684	37
GL-ADM180360IR-24	●	24V/53.8W		
GL-ADM225225R-24	●	24V/42.0W		
GL-ADM225225W/B/G-24	○●●	24V/58.9W	1315	38
GL-ADM225225IR-24	●	24V/42.0W		
GL-ADM225270R-24	●	24V/50.5W		
GL-ADM225270W/B/G-24	○●●	24V/70.6W	1578	39
GL-ADM225270IR-24	●	24V/50.5W		
GL-ADM225315R-24	●	24V/58.9W		
GL-ADM225315W/B/G-24	○●●	24V/82.4W	1841	40
GL-ADM225315IR-24	●	24V/58.9W		
GL-ADM225360R-24	●	24V/67.2W		
GL-ADM225360W/B/G-24	○●●	24V/94.1W	2104	41
GL-ADM225360IR-24	●	24V/67.2W		
GL-ADM270270R-24	●	24V/60.5W		
GL-ADM270270W/B/G-24	○●●	24V/84.7W	1894	42
GL-ADM270270IR-24	●	24V/60.5W		
GL-ADM270315R-24	●	24V/70.6W		
GL-ADM270315W/B/G-24	○●●	24V/98.8W	2210	43
GL-ADM270315IR-24	●	24V/70.6W		
GL-ADM270360R-24	●	24V/80.7W		
GL-ADM270360W/B/G-24	○●●	24V/112.9W	2524	44
GL-ADM270360IR-24	●	24V/80.7W		
GL-ADM315315R-24	●	24V/82.4W		
GL-ADM315315W/B/G-24	○●●	24V/115.3W	2578	45
GL-ADM315315IR-24	●	24V/82.4W		
GL-ADM315360R-24	●	24V/94.1W		
GL-ADM315360W/B/G-24	○●●	24V/131.8W	2946	46
GL-ADM315360IR-24	●	24V/94.1W		
GL-ADM360360R-24	●	24V/107.6W		
GL-ADM360360W/B/G-24	○●●	24V/150.6W	1733	47
GL-ADM360360IR-24	●	24V/107.6W		

Dimensional Diagrams(mm)

1

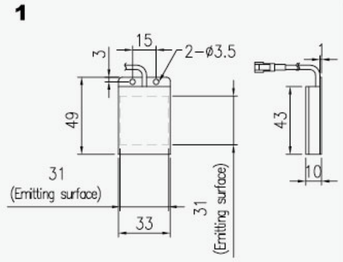

2

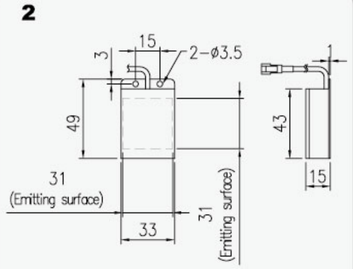

3

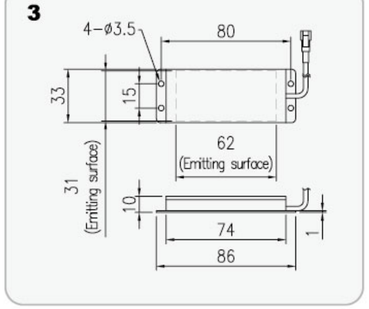

4

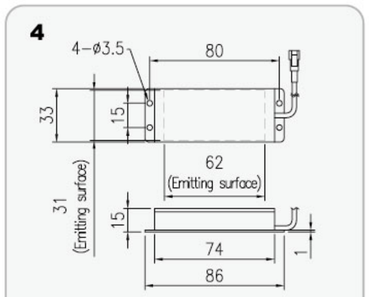

5

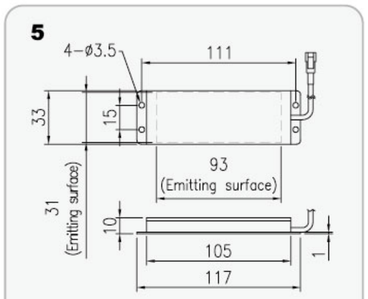

6

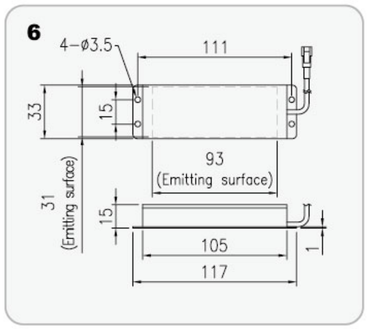

7

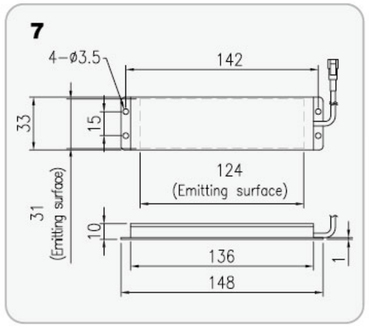

8

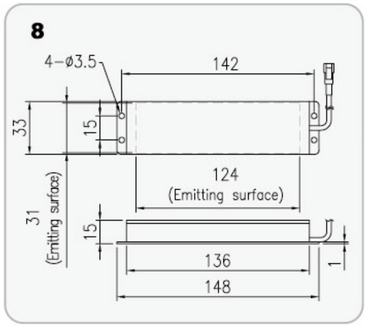

9

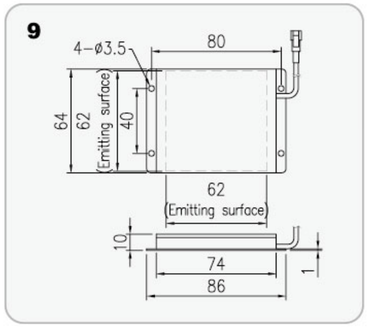

10

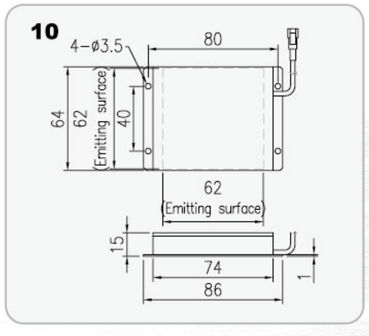

11

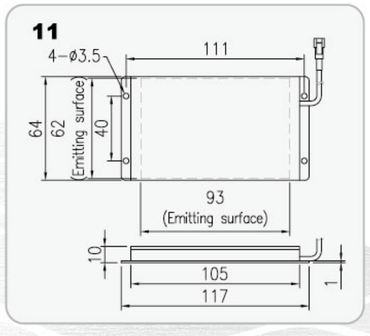

12

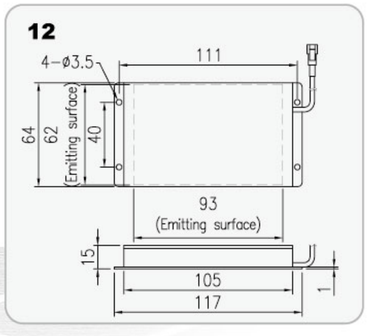

13

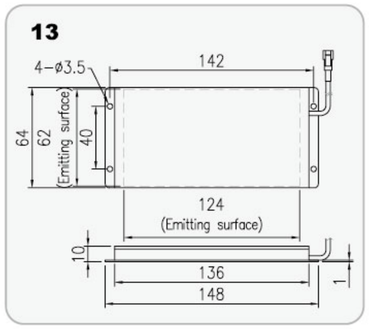

14

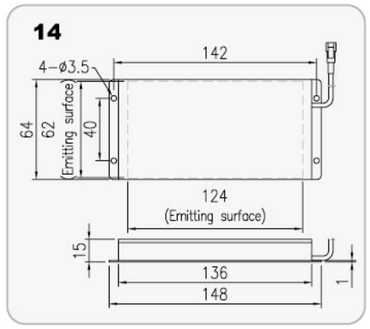

15

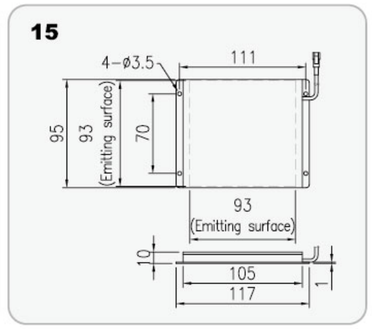

16

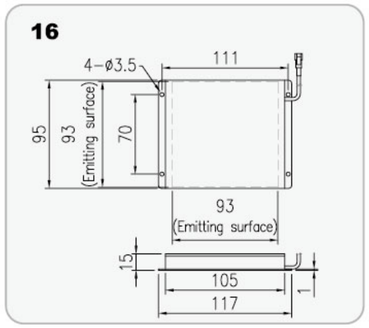

17

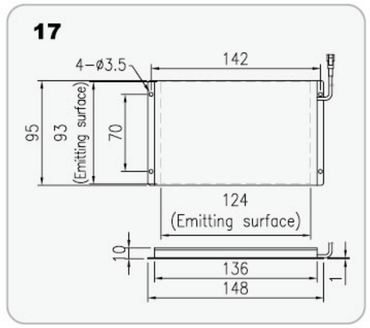

18

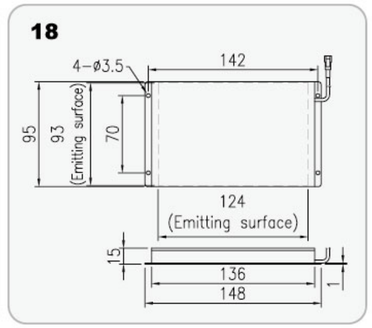

19

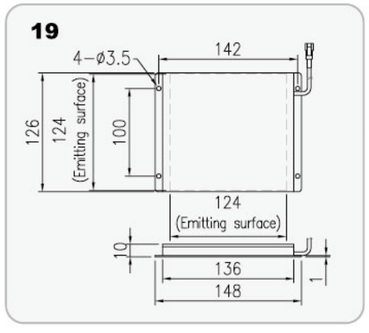

20

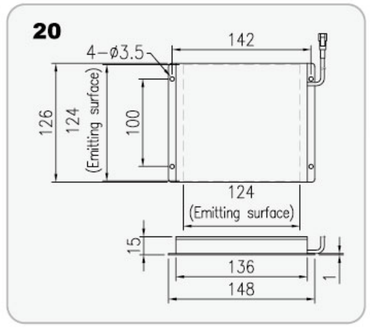

21

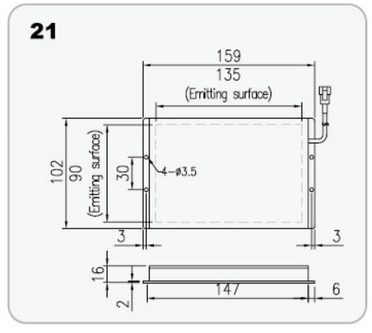

22

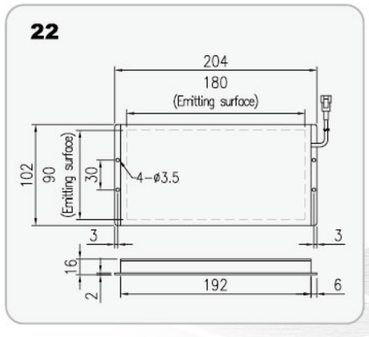

23

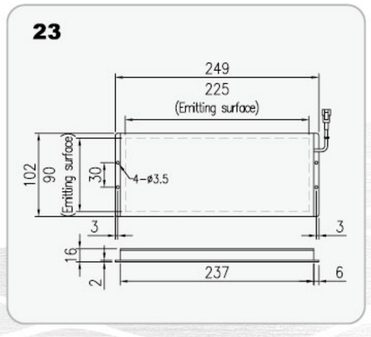

24

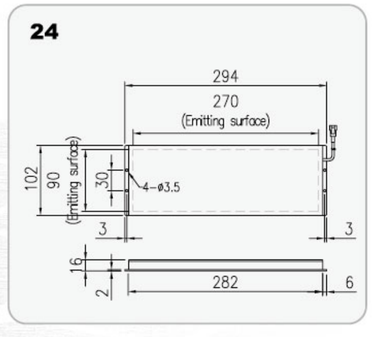

Dimensional Diagrams(mm)

25

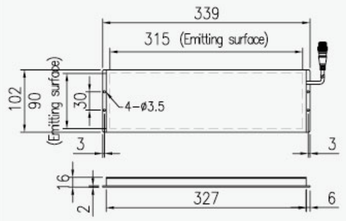

26

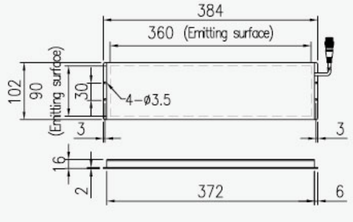

27

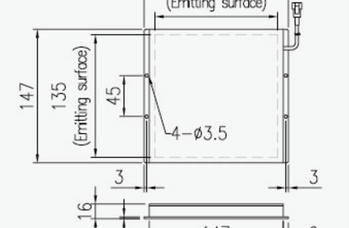

28

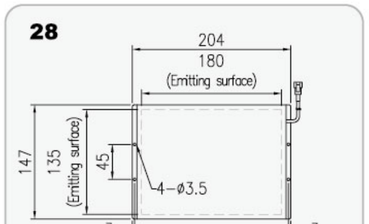

29

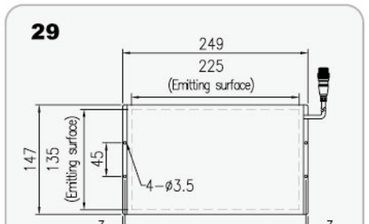

30

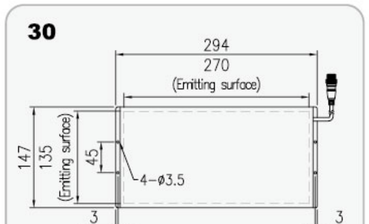

31

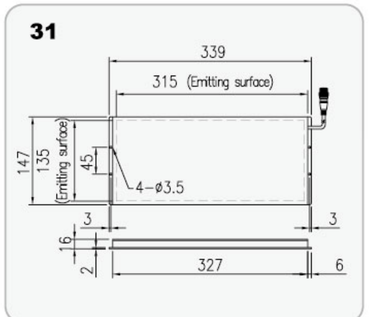

32

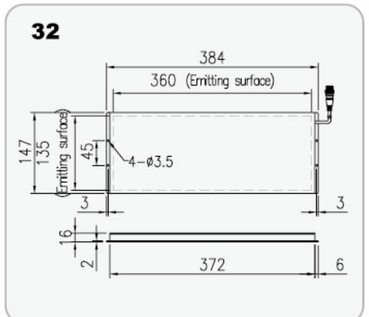

33

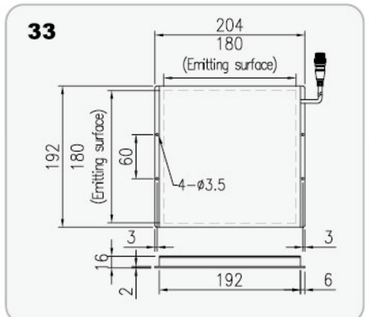

34

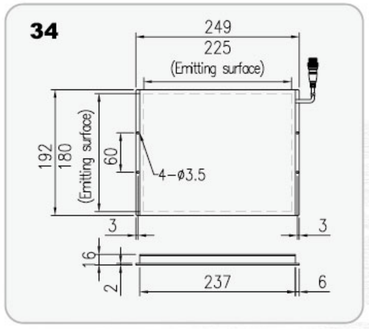

35

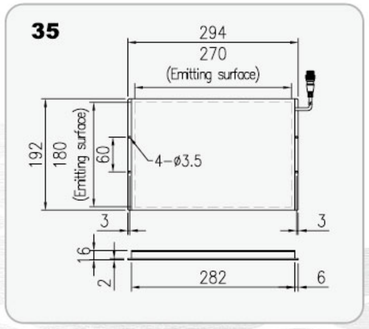

36

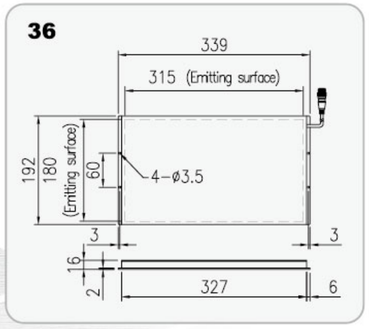

37

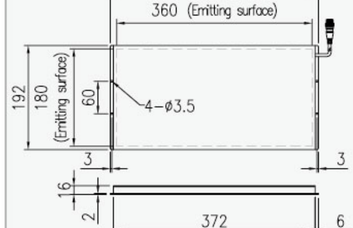

38

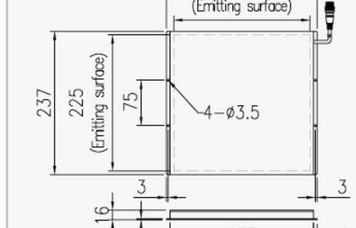

39

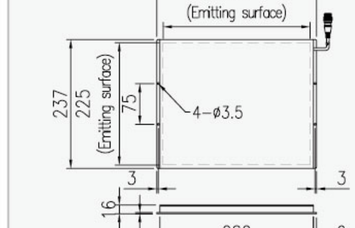

40

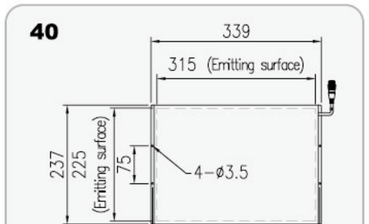

41

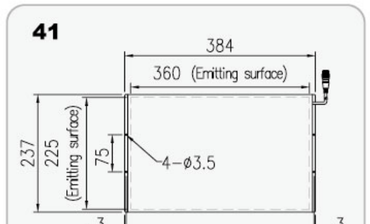

42

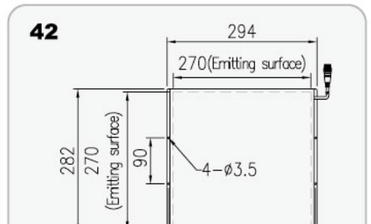

43

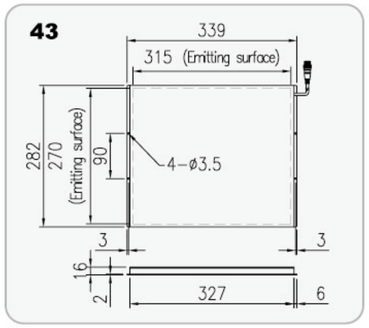

44

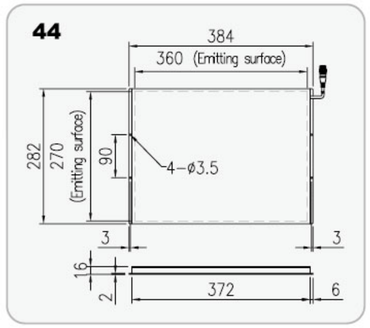

45

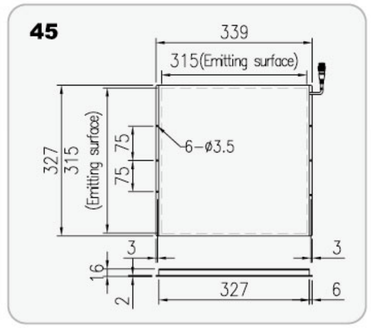

46

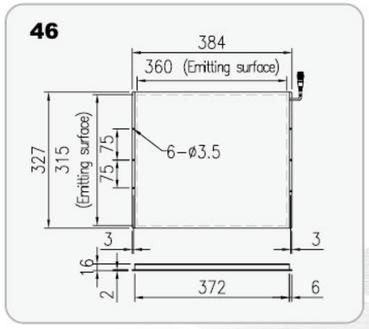

47

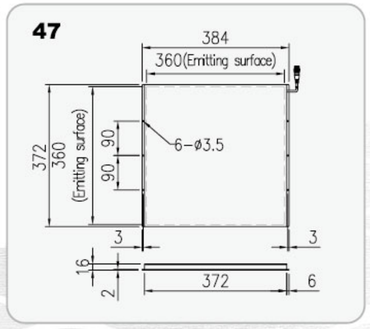

NEW High Directivity Backlights

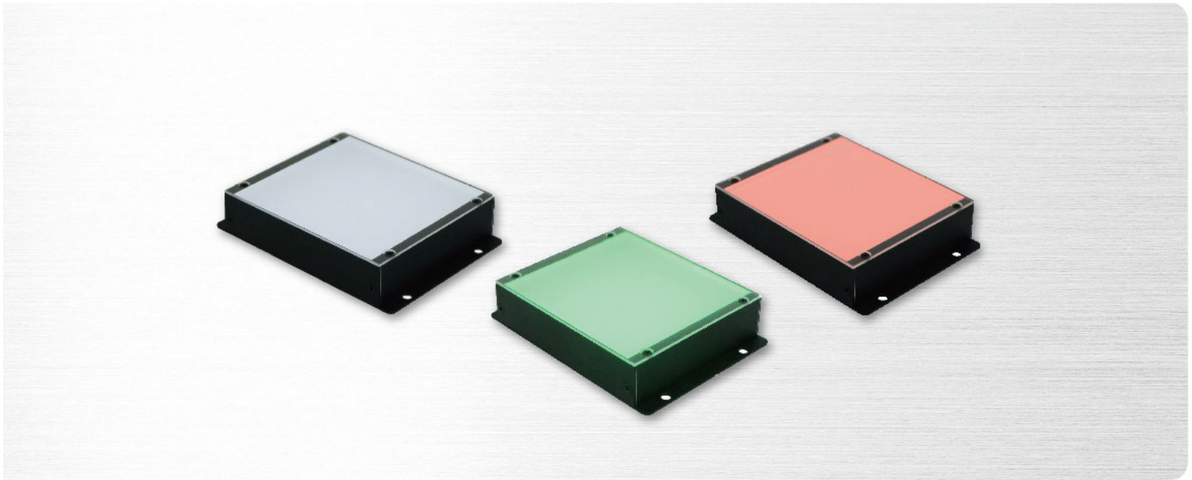

Outline

The thin flat surface emits high-directivity light evenly.

Feature

1. Equipped with a high-directivity optical mode, it can suppress the diffusion of light and achieve high-directivity illumination.
2. Equipped with a high-directivity optical film, the brightness can be greatly improved, and high-speed detection can be applied.
3. High-directivity backlight is suitable for dimensional measurement.

Applications

1. Exterior visual inspection for electronic parts
2. Lead frame inspection
3. Inspection of transparent object from stain and other particles
4. Omnigenous outline observations
5. Inspection in bend lead for GFPS, QSPs, and SOPs

Model explanation

GL-DADM□□△△○

- Color
- Dimension of the width
- Dimension of the length

Available Models

Model	Color	Power Consumption	Weight (g)	Dimension
GL-DADM3030R-24	●	24V/1.44W		
GL-DADM3030W/B/G-24	○●●	24V/1.86W	30	1
GL-DADM3030IR-24	●	24V/1.44W		
GL-DADM6060R-24	●	24V/4.1W		
GL-DADM6060W/B/G-24	○●●	24V/5.3W	60	2
GL-DADM6060IR-24	●	24V/4.1W		
GL-DADM9090R-24	●	24V/9.2W		
GL-DADM9090W/B/G-24	○●●	24V/9.4W	160	3
GL-DADM9090IR-24	●	24V/9.2W		
GL-DADM120120R-24	●	24V/16.4W	260	
GL-DADM120120W/B/G-24	○●●	24V/21.2W	283	4
GL-DADM120120IR-24	●	24V/16.4W	260	

Imaging examples

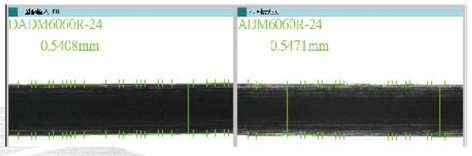

Luminous intensity distribution characteristics

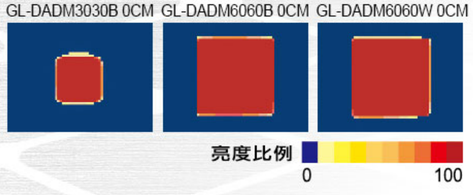

Dimensional Diagrams(mm)

1

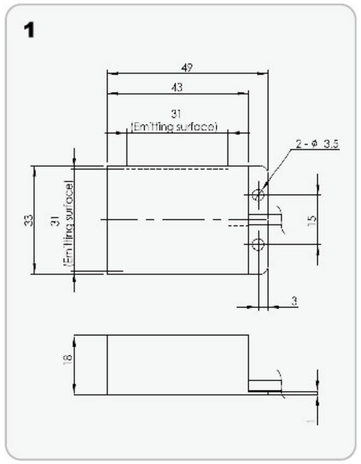

2

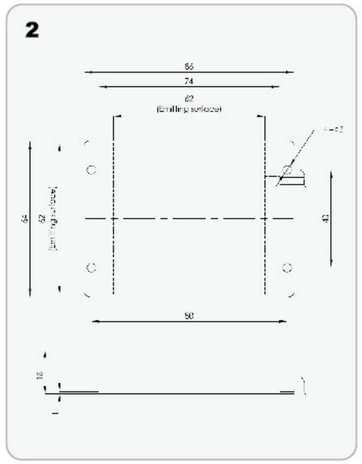

3

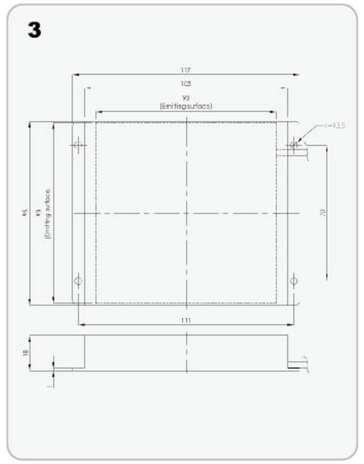

4

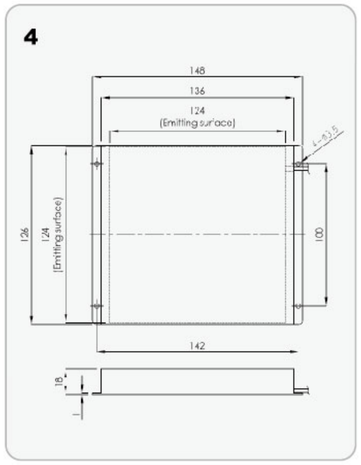

Line Lights

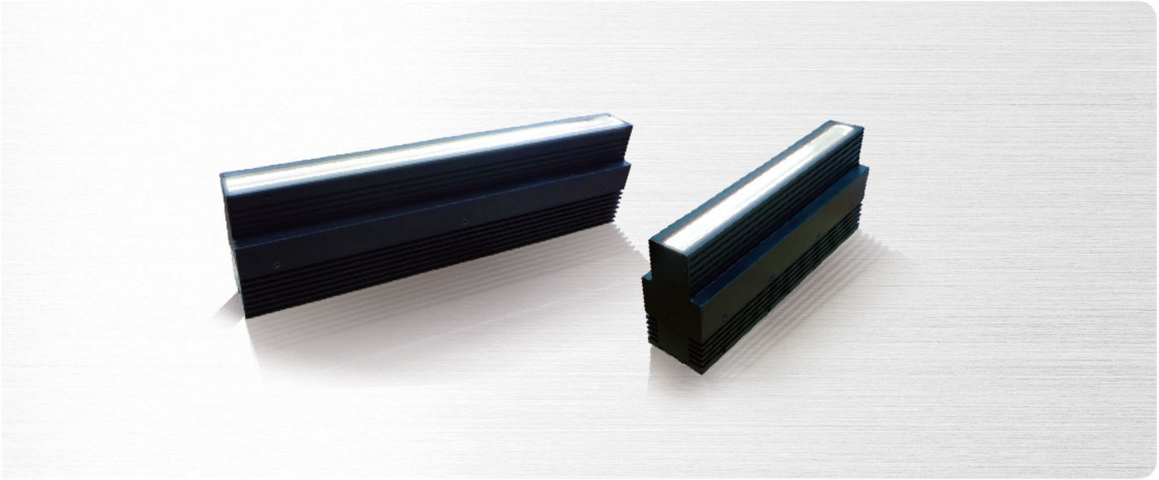

Outline

Air cooling method. Designed to prevent diffused light. Made with 100mm modules.

Feature

1. Custom orders are accepted. Light emitting surface length up to 1000mm.
2. Diffusion plates are available. Can be used as backlight.
3. Inspection of scratches detection and uneven surfaces.

Major applications

1. Coaxial lighting for highly reflective surfaces, such as wafers, metal surfaces, liquid-crystal and glass adjustment.

Model explanation

GL-LS3-□□□○
- Color
- Dimension of the emitting surface

GL-LS4-□□□○
- Color
- Dimension of the emitting surface

Available Models

Model	Color	Power Consumption	Weight (g)	Dimension
GL-LS3-100R	●	950mA/21.5W	650	1
GL-LS3-100W/B/G	○●●	950mA/31W		
GL-LS3-200R	●	950mA/43W	1113	2
GL-LS3-200W/B/G	○●●	950mA/62W		
GL-LS3-300R	●	950mA/64.5W	1649	3
GL-LS3-300W/B/G	○●●	950mA/93W		
GL-LS3-400R	●	950mA/86W	2150	4
GL-LS3-400W/B/G	○●●	950mA/124W		
GL-LS3-700W	○	1.7A/73W	3650	5
GL-LS3-1600W-DP	○	5600mA/196W	8150	6
GL-LS4-1000W	○	2.5A/87.5W	5150	7
GL-LS4-4000W	○	480W	20150	8

Dimmer For Line Light

Available Models

Power Model	Power Requirement	Output	Connector	Output Type	Dimension	Weight (g)
GLC-RPI3-295	AC100V~AC240V	950mA	HR30-7R-12P	Current Control	9	2011
GLC-RPI3-495					10	1981

Dimensional Diagrams(mm)

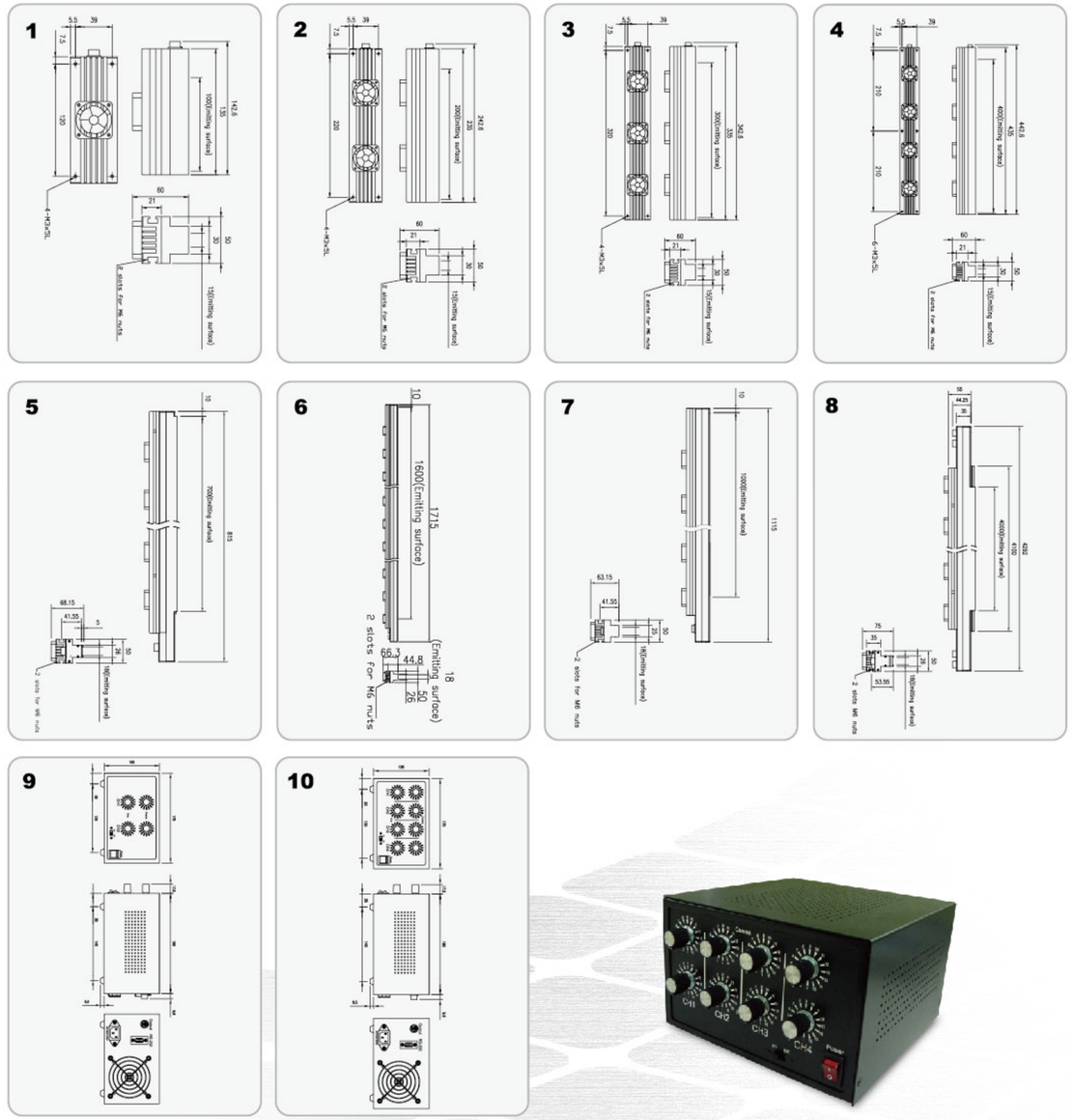

NEW High Intensity Line Lights

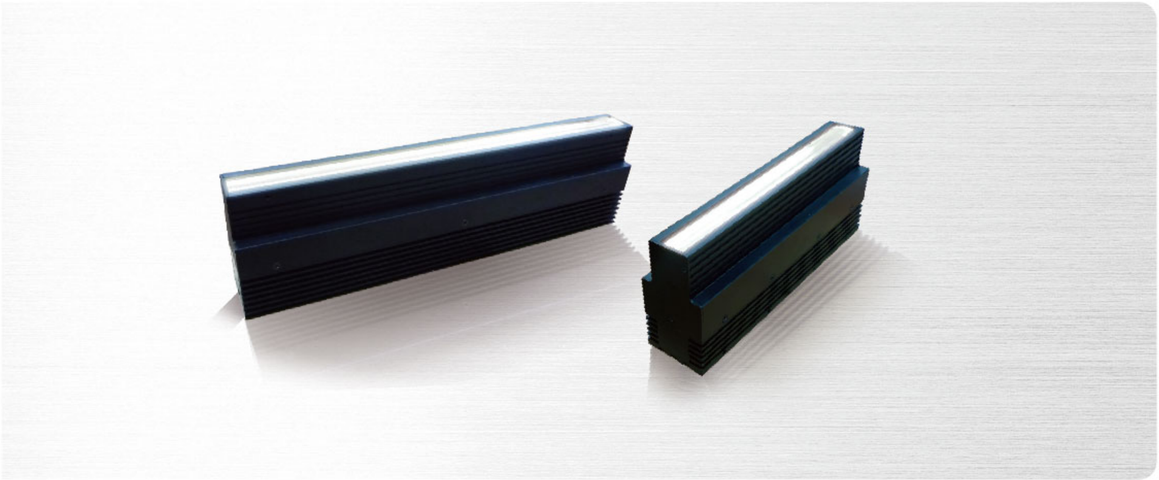

Outline

Air cooling method. Designed to prevent diffused light. Made with 100mm modules.

Feature

1. Custom orders are accepted. Light emitting surface length up to 1000mm.
2. Diffusion plates are available. Can be used as backlight.
3. Inspection of scratches detection and uneven surfaces.

Application

Inspection for easily reflective objects such as wafers, metal surfaces, film rolls, liquid crystals and glass.

Model explanation

GLC-HLS4-□□□○

- ○: Color
- □□□: Dimension of the emitting surface

Available Models

Model	Color	Power Consumption	Weight (g)	Dimension
GL-HLS4-200W	O	0.8A/31.6W	1113	1
GL-HLS4-300W	O	1.2A/47.4W	1649	2
GL-HLS4-400W	O	1.6A/63.2W	2150	3
GL-HLS4-500W	O	2A/79W	2650	4
GL-HLS4-600W	O	2.4A/94.8W	3150	5
GL-HLS4-700W	O	2.8A/110.6W	3650	6
GL-HLS4-800W	O	3.2A/126.4W	4150	7
GL-HLS4-900W	O	3.6A/142.2W	4650	8
GL-HLS4-1000W	O	4A/158W	5150	9

Dimmer for High Intensity Line Lights NEW

Available Models

Power Model	Power Requirement	Output	Connector	Output Type	Dimension	Weight (g)
GLC-RPI4-HLS4-200		800mA			1	
GLC-RPI4-HLS4-300		1200mA			2	
GLC-RPI4-HLS4-400		1600mA			3	
GLC-RPI4-HLS4-500		2000mA			4	
GLC-RPI4-HLS4-600	AC100V~AC240V	2400mA	PLT168	Current control	5	2222
GLC-RPI4-HLS4-700		2800mA			6	
GLC-RPI4-HLS4-800		3200mA			7	
GLC-RPI4-HLS4-900		3600mA			8	
GLC-RPI4-HLS4-1000		4000mA			9	

Dimensional Diagrams(mm)

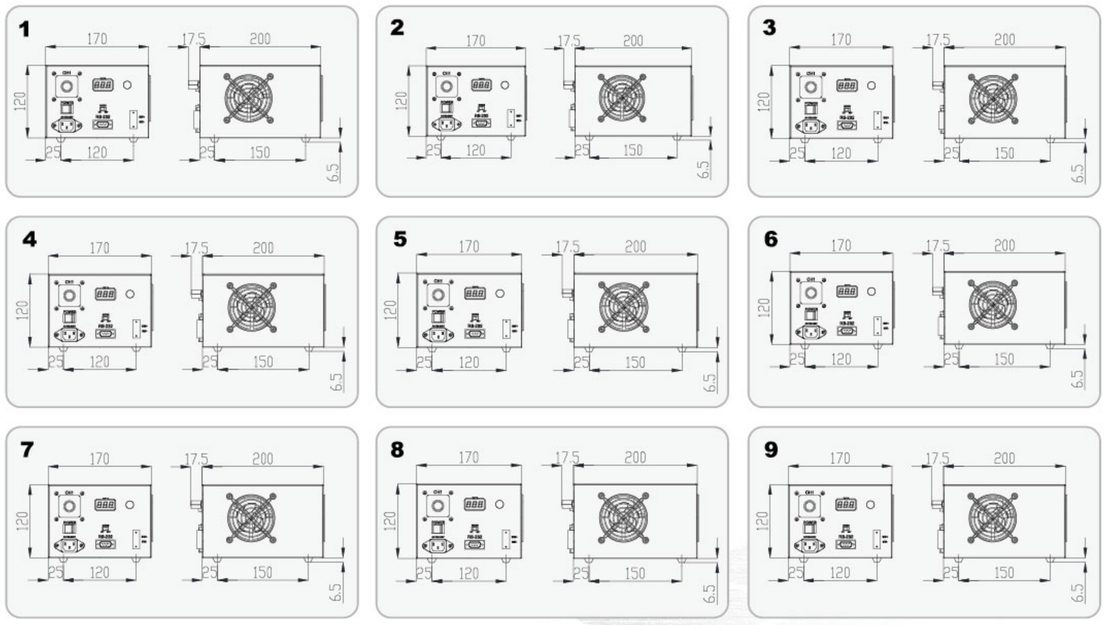

Line Coaxial Lights

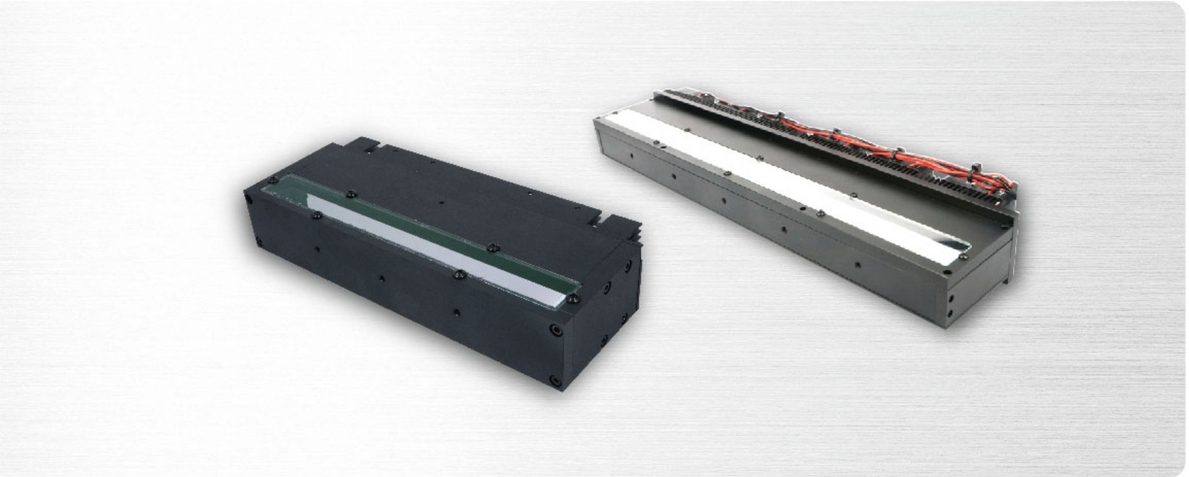

Outline

Diffused light from the LED is illuminated on the same axis as the camera axis. The light source and the camera coaxially irradiate the diffused light uniformly, and the linear coaxial epi-illumination light source can be imaged by the line scan camera.

Feature

Inspection of reflective materials.

Major applications

1. Inspection of highly reflective surfaces, such as wafers, metal surfaces, film, liquid crystals andglass.
2. Imprint check
3. Inspection of pattern of printed boards.

Model explanation

GL-IFV3-□□□□□○
- Color
- Dimension of the square emitting surface

GL-IFVL-□□□○
- Color
- Dimension of the square emitting surface

Available Models

Model	Color	Power Consumption	Weight (g)	Dimension
GL-IFV3-20020W/B/G-24	○●●	24V/19W	1118	1
GL-IFV3-20020W/B/G-F-24	○●●	24V/35W	1269	2
GL-IFV3-30020W/B-24	○●	24V/72.8W	849	3
GL-IFV3-39020W/B/G-24	○●●	24V/56W	1135	4
GL-IFV3-39020W/B/G-F-24	○●●	24V/71W	1711	5
GL-IFVL-200W	○	0.2A/7.4W	1118	6
GL-IFVL-200W-F	○	0.4A/14.8W	1269	7

Dimensional Diagrams(mm)

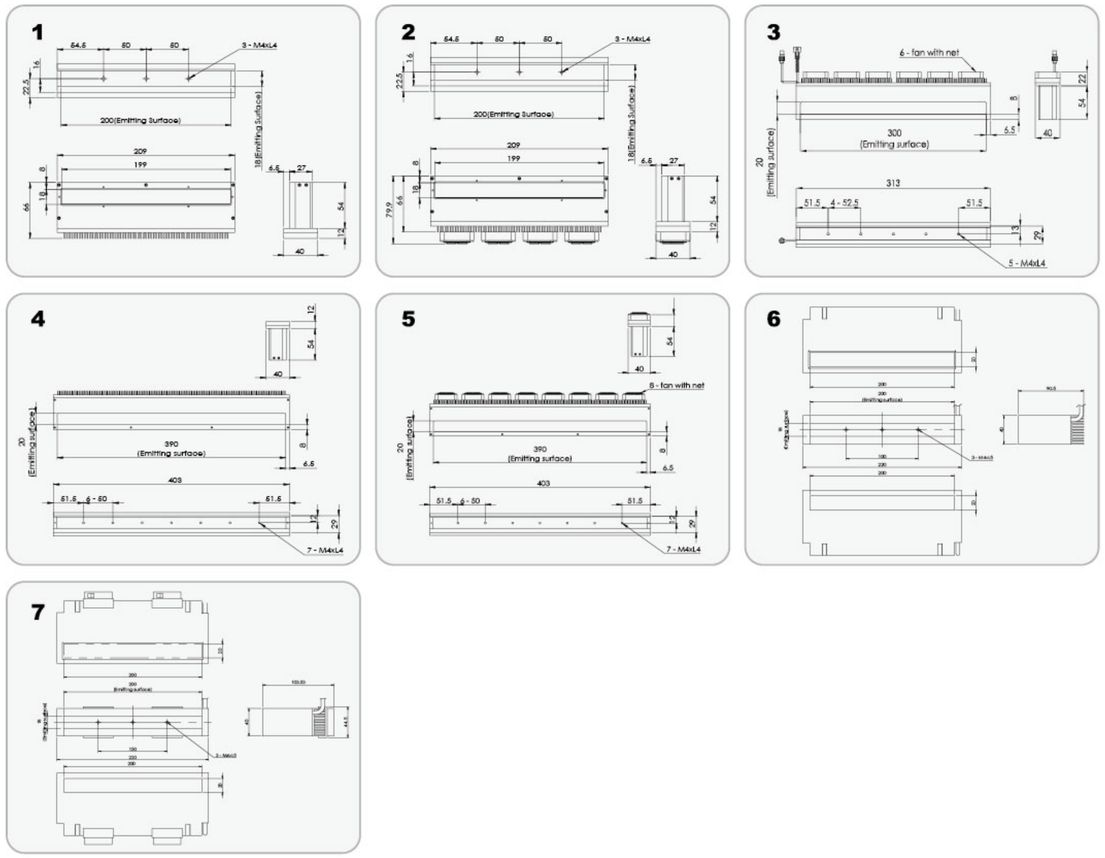

Robotic Lights

Outline

Special light source for robot arms. Integrated light source, the ring light and square bevel light, can solve four-corner shadow and four-corner edge contour problems.

Feature

1. Applied with the robotic arms for inspection.
2. Customized service is accepted.

Major applications

1. Positioning for substrates and printed boards, inspection for chip components.
2. Fabrication substrates crack inspection, metal board surface inspection.
3. Identify for multiple shapes.
4. Identify size measurement and shape for electronic parts.

Available Models

Model	Color	Power Consumption	Weight (g)	Dimension
GL-RB01W-24	○	24V/21.35W	630.5	1
GL-RB02W-24	○	24V/35.42W	970.5	2

Dimensional Diagrams(mm)

1

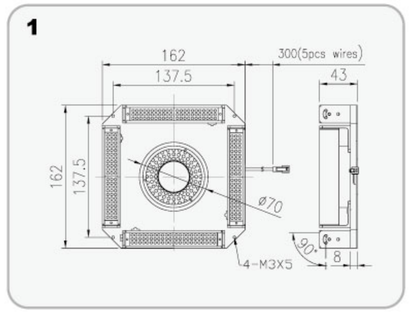

2

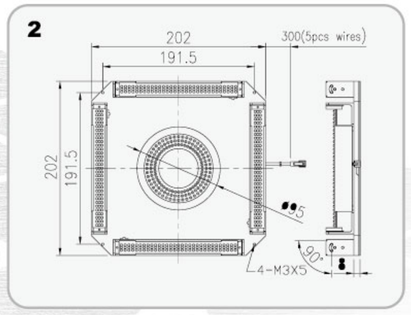

Multi-Angle Ring Lights

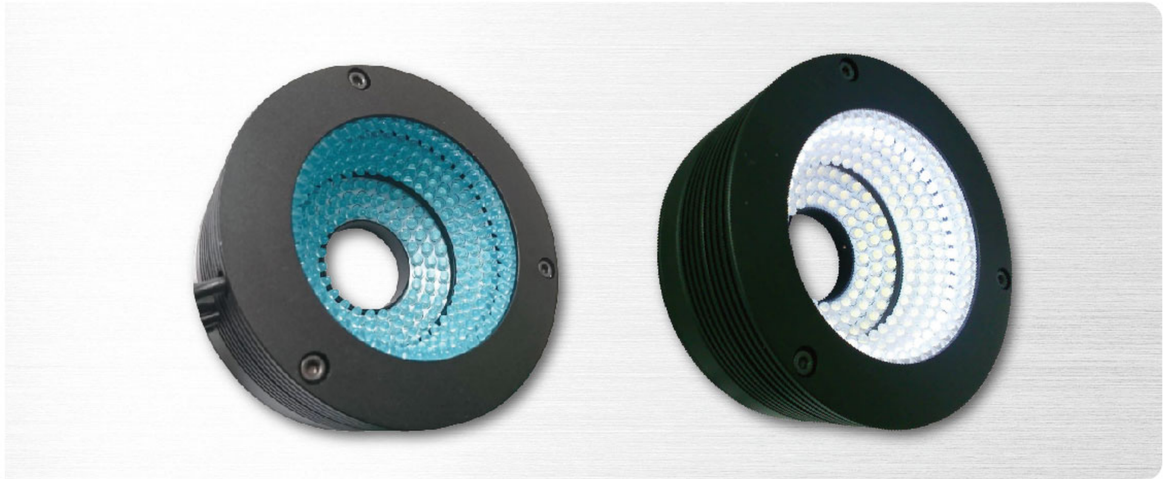

Outline

360° shadow-free illumination, including three different angles which are 30°, 60° & 90°

Feature

1. The ring light for each 8 angles can be controlled individually.
2. Reduce lamp replacement working hours and costs.
3. Can be used for light laboratory evaluation cases.
4. Customized service is provided.

Major applications

1. Liquid crystal adjustment, and plastic container inspection.
2. IC impress inspection.
3. Identify for multiple shapes.
4. Identify size measurement and shape for electronic parts.

Model explanation

GL-MADR □□△△○ 8C

□ —— External diameter of the ring

△ —— Internal diameter of the ring

○ —— Color

Available Models

Model	Color	Power Consumption	Weight (g)	Dimension
GL-MADR9528W/B/G8C-24	○●●	24V/20.16W	315.6	1
GL-MADR10536R-24	●	24V/4.8W	390	2
GL-MADR10536B-24	●	24V/9.68W		

Dimensional Diagrams(mm)

1

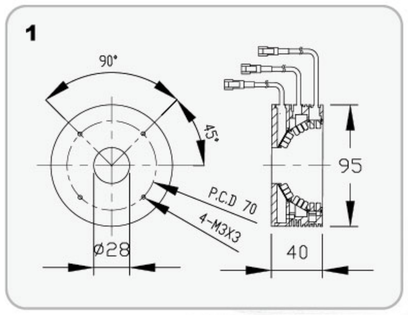

2

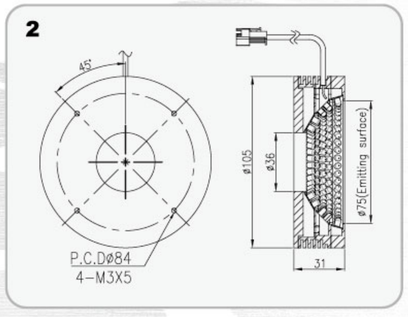

NEW Triple Color Lights

Outline

It can adjust and control three kinds of light source lighting independently (Lighting colors: RGB)

Feature

1. 360° shadow-free illumination
2. Different colors can be adjusted according to detection conditions.
3. Light up the three primary colors of R, G, and B mixed to emit light, yellow, light blue, pink and other light colors are all. The ideal illumination light can be easily prepared.
4. To save valuable man-hours for replacing other light sources.
5. Suitable for laboratory lighting evaluation cases.

Major applications

1. BGA solder ball position, shape and area in inspection
2. Inspection of wafers or glass substrates for scratches and stain
3. Reading laser engraving
4. Edge detection and defect inspection

Model explanation

GL-DR□□□△△○○○
GL-LDR□□□△△○○○
□—External diameter of the ring
△—Internal diameter of the ring ○—Color

GL-DIFV2-□□○○○
□—Dimension of the square emitting surface ○—Color

Available Models

Model	Color	Power Consumption	Weight (g)	Dimension
GL-DR12060RGB-24	●●●	24V / 13.44W	434	1
GL-LDR5328RGB-24	●●●	24V / 1.8W	164	2
GL-DIFV2-50RGB	●	0.45A / 6.10W	260	3
	●●	0.45A / 9.07W		
GL-DIFV2-70RGB	●	0.8A / 14.59W	580	4
	●●	0.8A / 21.5W		

Dimensional Diagrams(mm)

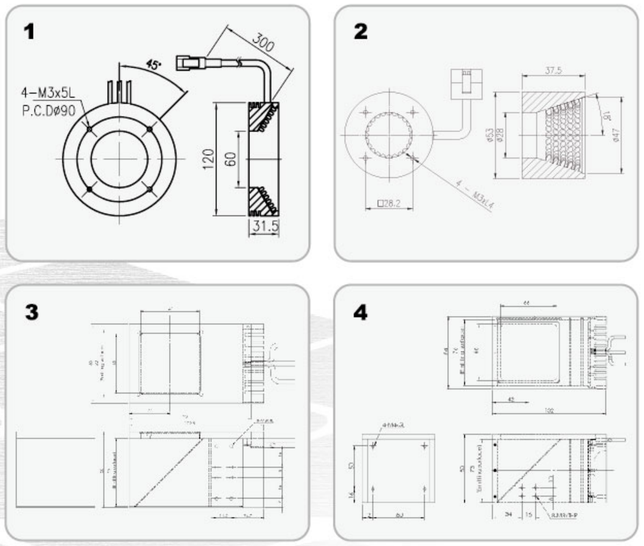

Ultraviolet (UV) Lights

Outline

Design with HI-POWER UV LED
With UV light, to exciting the ink material and generate a fluorescent reaction.

Feature

1. Inspection of scratches and dark surfaces through UV light.
2. The standard wavelength are 365nm, 395 nm, 405nm. Customized service is provided with 375nm and 385nm.
3. The light can be customized

Major applications

1. Photography use in the difference in the scattering rate
2. Use with a CCD camera supporting the ultraviolet ray range
3. Detection of dirt on glass substrates and dust on CCD devices
4. Scan the image of the QR Code

Available Models

Model	Color	Power Consumption	Weight (g)	Dimension
GL-IFV34UV-24	●	24V/4.8W	132	1
GL-IFV40UV365-24	●	24V/3.9W	184	2
GL-IFV40UV-24	●	24V/5.8W		
GL-LV14UV365-24	●	24V/0.48W	16	3
GL-HLV2-24UV365-1W	●	350mA/1W	55	4
GL-HLV2-28UV365	●	300mA/1W	55	5
GL- DB2-6030UV365-24	●	24V/3W	68	6
GL- DB2-6030UV405-24	●	24V/3W		
GL- DB2-31030UV365-24	●	24V/10.3W	340	7
GL- DR2-6030UV365-24	●	24V/2.3W	67	8
GL- DR2-10030UV365-24	●	24V/7.76W	219	9
GL-LDR2-10068UV365-24	●	24V/10.3W	140	10
GL-IFV2-20UV-24	●	24V/1.7W	56	11
GL-IFV2-20UV395-24	●	24V/1.7W		
GL-IFV2-34UV-24	●	24V/3.9W	150	12
GL-IFV2-34UV395-24	●	24V/3.9W		

Model explanation

GL-IFV□□○ — □ Dimension of the square emitting surface ○ Color
GL-LV □□○ — □ Spot Diameter ○ Color
GL-HLV2-△□□○ — △ Version □ Spot Diameter ○ Color
GL-DB2-□□△○ — □ Dimension of the length △ Dimension of the width ○ Color
GL-DR2-□□△△○ / GL-LDR2-□□△△○ — □ External diameter of the ring △ Internal diameter of the ring ○ Color
GL-IFV△-□□○ — □ Dimension of the square emitting surface △ Version ○ Color

Imaging examples

Micro QR Code & Data Matrix
The QR code can be scanned and the image is visible under UV.

Dimensional Diagrams(mm)

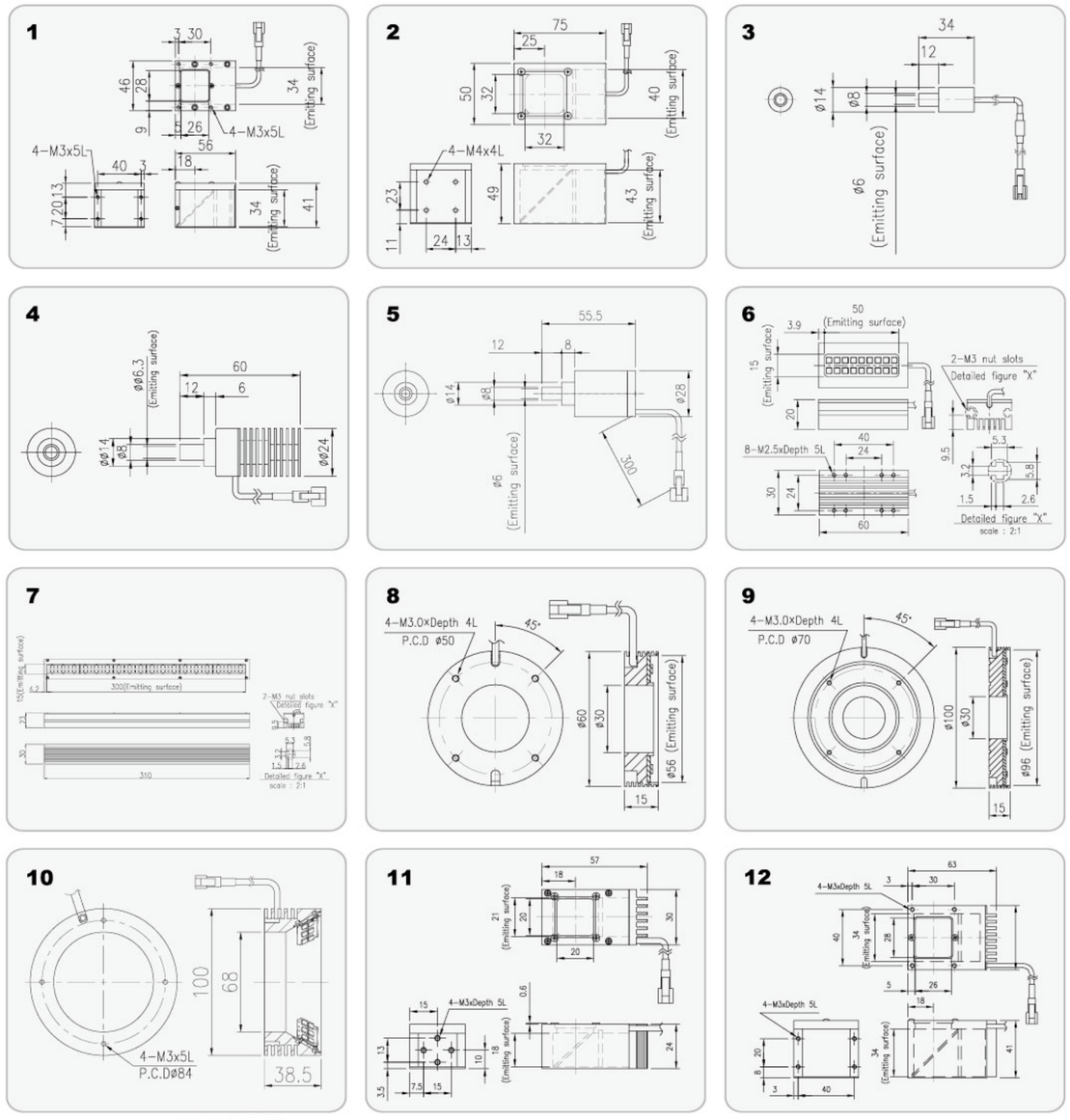

Special Lighting

Microscopes Lights

Outline

Microscope lights can control four lighting areas individually or control all area at the same time with microscopes.

Feature

1. Choose the four different sections as user want.
2. Light weight design with built-in LED and high-resolution dimmer.
3. Service life is more than 30,000 hours. No heat, no flicker, it can replace fluorescent lamps and halogen lamps.
4. With diffuser plate, effectively reduce reflection interference.
5. The color temperature of white light can be customized.

Major applications

1. Electronic Industry
2. Pharmaceutical Industry
3. Semi-conductor/TFT industry
4. Measurement equipments

Model explanation

GL-MC □□△△

External diameter of the ring

Internal diameter of the ring

Available Models

Model	Color	Power Consumption	Weight (g)	Dimension
GL-MC9050W/B (US AC Adapter)	○●	6W	100	1

Luminous intensity distribution characteristics

GL-MC9050W Graph

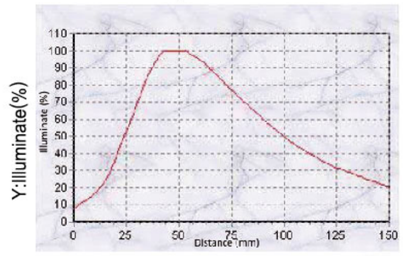

X:Distance(Unit:mm)

Illuminate Height: 5CM,10CM,15CM

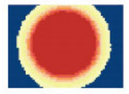

WD:70mm

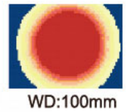

WD:100mm

Dimensional Diagrams(mm)

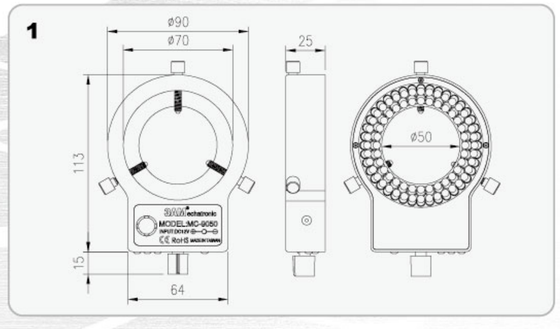

Four-Segment Ring Illumination

Outline

Control four lighting areas individually or control all area at the same time.

Feature

1. Choose the four different sections as user want.
2. For pressure mark and scratches which are hard to find, it can present a contrasting image.
3. With diffuser plate, effectively reduce reflection interference.

Major applications

1. Positioning for substrates and printed boards, inspection for chip components
2. Liquid crystal adjustment, plastic container inspection
3. IC impress inspection

Model explanation

GL-DR □□△△○

- □ —— External diameter of the ring
- △ —— Internal diameter of the ring
- ○ —— Color

Available Models

Model	Color	Power Consumption	Weight (g)	Dimension
GL-DR6736B4	●	12V / 4.75W	83	1
GL-DR6746B4	●	12V / 2.78W	109	2
GL-DR9050B4	●	12V / 11.52W	162	3
GL-DR12060W4-24	●	24V / 12.6W	418	4
GL-DR2-9050B4	●	12V / 10.36W	162	5

Luminous intensity distribution characteristics

GL-DR6736B4 Graph

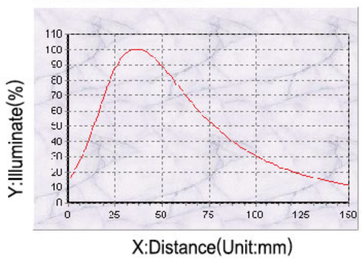

Illuminate Height: 5CM, 10CM, 15CM

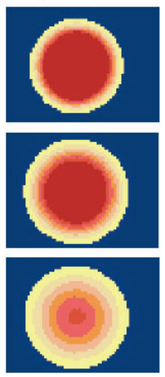

Dimensional Diagrams(mm)

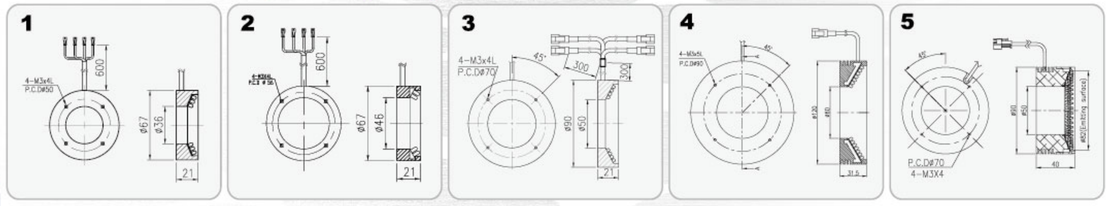

LED UV Irradiation Curing Device

Outline

With small volume and lightweight design, it can instantly emit high-energy UV light. Wavelength 365nm is for glue drying and wavelength 385nm is for ink drying.

Feature

1. Provide high power ultraviolet light instantaneously without preheat to shorten working hours.
2. No thermal radiation. Green energy to reduce environmental burden.
3. External I/O point can be with foot switches to produce manually or in automated production lines.
4. Reduce lamp replacement working hours and costs.
5. Friendly interface is designed to reduce the training time of operator.

Practical applications

1. High-quality Hardening (Drying) of Ink
2. High-accuracy Adhesion
3. Simultaneous Multipoint Adhesion

Model explanation

GL-UVC□□ — Spot Diameter

GL-UVC-CAPL□ — Spot Diameter

Luminous intensity distribution characteristics

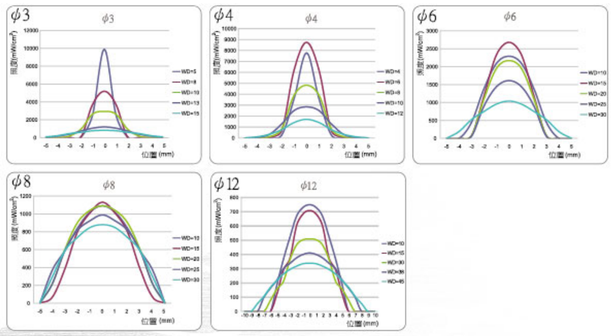

Handy Dimmer NEW

Available Models

Power Model	Power Requirement	Ampere	Connector	Output Type	Weight (g)
GLC-DPI2-170	AC100-240V	700mA	SMP-0.3V×1	RS-232	737

Available Models

Head Unit Model	GL-UVC12				
Lens Unit Model	GL-UVC-CAPL3	GL-UVC-CAPL4	GL-UVC-CAPL6	GL-UVC-CAPL8	GL-UVC12
Dimension	1	2	3	4	5
Wavelength	365nm / 385nm				
LED Service Life	30,000hr				
Spot Diameter	ϕ3mm	ϕ4mm	ϕ6mm	ϕ8mm	ϕ12mm
Recommended Working Distance	8mm	6mm	15mm	15mm	30mm
Peak Illumination (mW/cm^2)	9800/11800	8700/10500	2600/3200	1100/1400	700/900
Steady-State Illumination (mW/cm^2)	5000/6000	5100/6200	1900/2300	1000/1200	400/500
Power Consumption	650mA/2.6W				
Ambient Humidity Range	30~80%				
Ambient Temperature Range	5~35℃				
Material	Aluminum, Glass				
Weight	1.4g	1.4g	1.2g	1.2g	32.2g

Dimmer

Model		GLC-UVCDB
Dimension		6
Irradiation Method		Irradiation Illumination power (0-100%), Illumination time (max. 99.9sec/unlimited)
Cumulative Illumination Summation		Cumulative illumination summation
Terminal Block I/O	Input	Emergency shutdown, UV illumination start/stop (All channels/4-channel))
	Output	Ready output (all-channels /4-channel), error output, operating
Cooling Method		Air cooled (no fan)
Power Consumption		AC100~240V
Output		650mA/CH
Ambient Temperature Range		+5~+35℃
Ambient Humidity Range		30~85%
Material		SPCC
Weight		935g

Optional Accessories

Model	AL-UVC-GRIP	ALC-TFS201
Dimension	7	8

Dimensional Diagrams(mm)

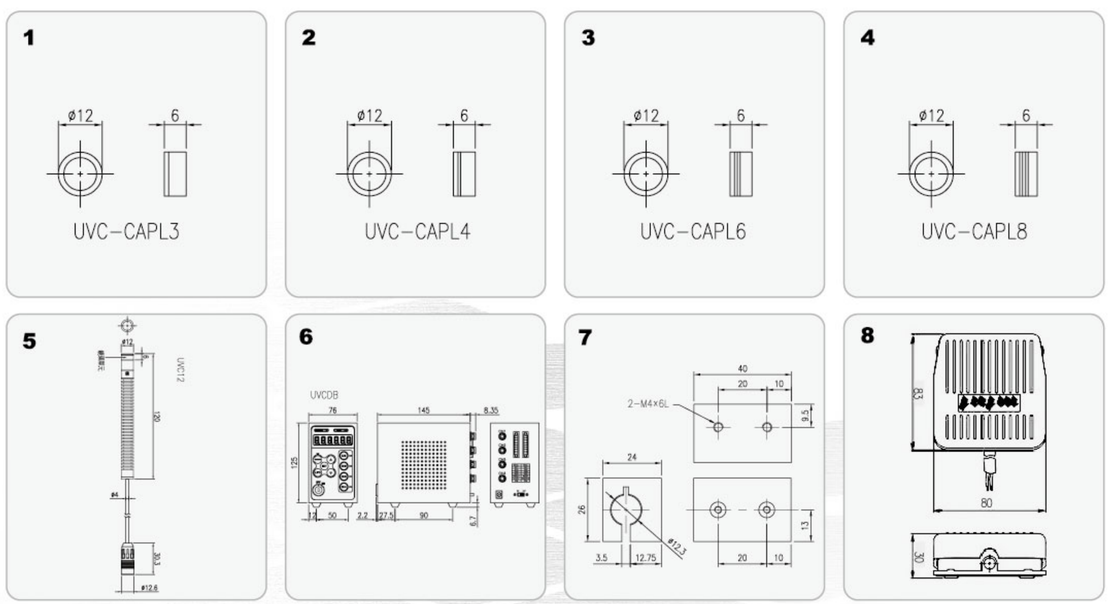

Special Lighting

LED UV Irradiation Bar Curing Device

Outline

Made with 40mm×20mm modules. UV wavelength 365nm can be used for glue curing, and 385nm can be used for ink curing.

Feature

1. Provide high power ultraviolet light instantaneously without preheat to shorten working hours.
2. No thermal radiation. Green energy to reduce environmental burden.
3. Reduce lamp replacement working hours and costs.
4. With standardized exterior design, it can increase the light source according to the needs of the production line.

Major applications

1. Electronic Industry
2. Glass Industry
3. Optic & Photonics Industry
4. Pharmaceutical Industry
5. Sophisticated Processing

Model explanation

GL-UVCBL □□□□□-○○○

- ○○○ — Wavelength
- □□□□□ — Dimension of the bar emitting surface

Luminous intensity distribution characteristics

GL-UVCBL-16020-365

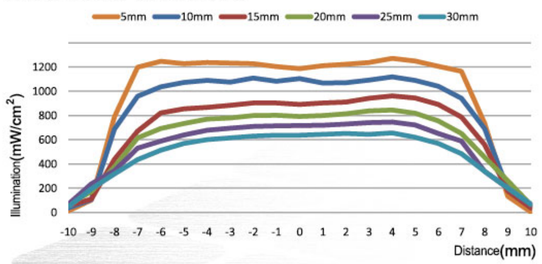

Model explanation

Model	GL-UVCBL8020-XXX	GL-UVCBL16020-XXX	GL-UVCBL32020-XXX	GL-UVCBL56020-365
Dimension	1	2	3	4
Wavelength	365/385/405nm			365nm
LED Service Life	30,000hr	30,000hr	30,000hr	30,000hr
Illumination Area	80mm*20mm	160mm*20mm	320mm*20mm	560mm*20mm
Peak Illumination (mW/cm^2)	1000/1200/1400	1000/1200/1400	1000/1200/1400	1000
Power Consumption	5A	10A	20A	35A
Ambient Temperature Range	0~35˚C	0~35˚C	0~35˚C	0~35˚C
Ambient Humidity Range	0~80%RH	0~80%RH	0~80%RH	0~80%RH
Material	SECC	SECC	SECC	SECC
Weight	1317g	2260g	4300g	9000g
Cooling Method	Air cooled with fan	Air cooled with fan	Air cooled with fan	Air cooled with fan

Dimmer

Model	GLC-UVCDBL
Dimension	5
Irradiation Method	Irradiation Illumination power(0% to 100%), illumination time (max. 999 sec/unlimited)
Dimmer Control	ON/OFF Control
Cooling Method	Air cooled
Power Supply Voltage	AC100~240V 50/60HZ
Power Consumption	2.5A×2
Ambient Temerature Range	0~35˚C
Ambient Humidity Range	0~80%RH
Material	SECC
Weight	4800g

Dimensional Diagrams(mm)

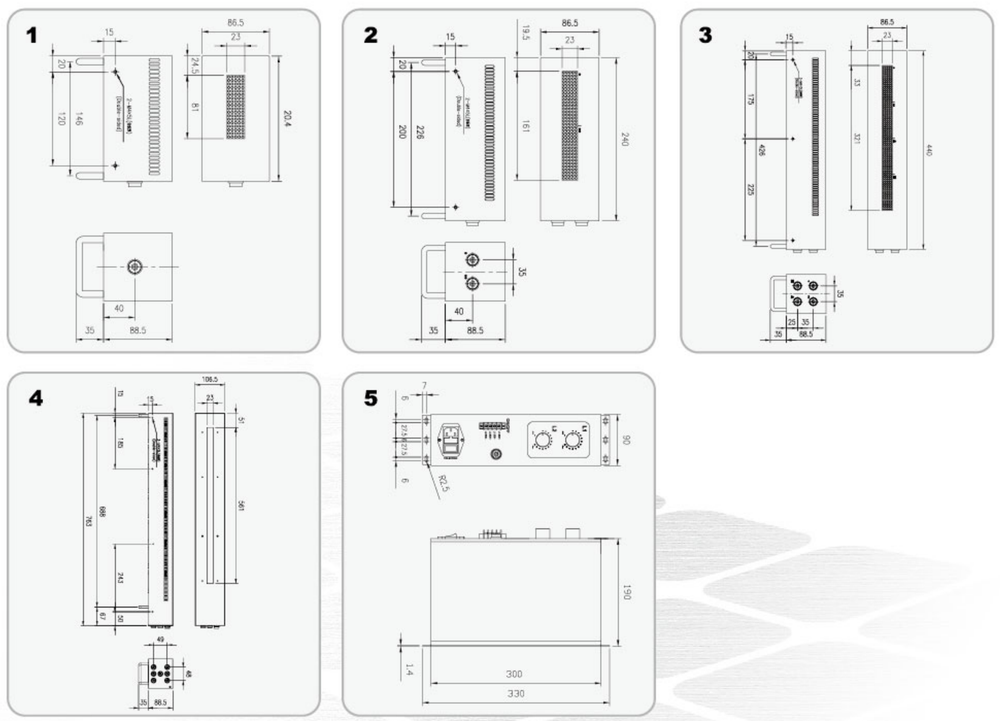

LED UV Irradiation Area Curing Device

Outline

Made with 100mm×100mm modules. UV wavelength 365nm can be used for glue curing, and 385nm can be used for ink curing.

Feature

1. Provide high power ultraviolet light instantaneously without preheat to shorten working hours.
2. No thermal radiation. Green energy to reduce environmental burden.
3. Reduce lamp replacement working hours and costs.
4. With standardized exterior design, it can increase the light source according to the needs of the production line.

Practical applications

1. Glass bonding
2. Display bonding
3. Large-area bondings requiring even, low-tension curing

Model explanation

GL-UVCP2 □□□□□□-○○○

Wavelength

Dimension of the square emitting surface

Luminous intensity distribution characteristics

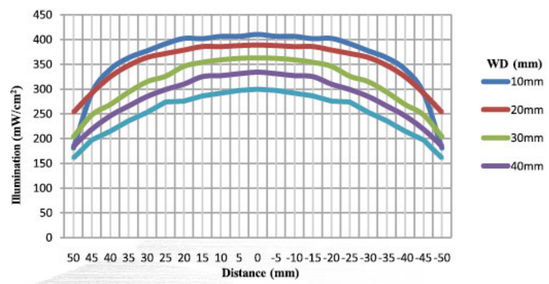

Model explanation

Model	GL-UVCP2-100100-365
Dimension	1
Wavelength	365/385/405nm
LED Service Life	30,000hr
Illumination Area	106*106mm
Peak Illumination	415mw/cm^2 @ 1cm
Power Consumption	7.5A MAX.
Ambient Temperature Range	5~25˚C
Ambient Humidity Range	30~80%
Material	AL, SPCC, GLASS
Weight	2500g
Cooling Method	Air cooled with fan

Dimmer

Model	GLC-UVCD2
Dimension	2
Dimmer Control	Manual control; ON/OFF
Cooling Method	Air cooled (no fan)
Power Supply Voltage	AC 100~240V 50/60Hz
Power Consumption	7.5A MAX.
Ambient Temerature Range	5~35℃
Ambient Humidity Range	30~80%
Material	SPCC
Weight	7300g

Dimensional Diagrams(mm)

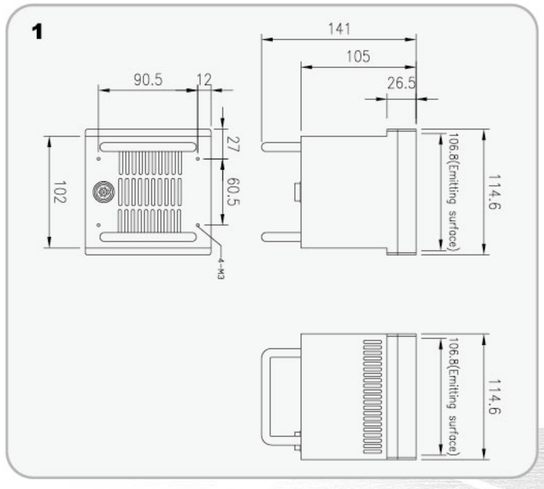

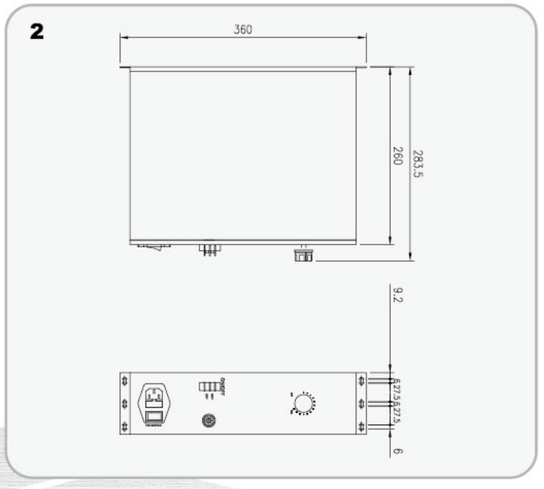

Special Lighting

LED Light Source

Outline

Replace for the 150W & 250W halogen/ metal halide lamps. Can be used with different fiber optic guides.

Feature

1. Life time: More than 300,00 hr.
2. Provide high power ultraviolet light instant-aneously without preheat.
3. No thermal radiation. Green energy to reduce environmental burden.
4. Reduce lamp replacement working hours and costs.

Available Models

Model	Color	Power Consumption	Weight (g)	Dimension
GLC-LFB2-150R/W/B/G	●○●●	100VA	1872	1
GLC-LFB2-150IR940	●	90VA	1735	2
GLC-LFB2-150IR940-HH	●	90VA	1872	2
GLC-LFB2-250	○	300VA	5076	3
GLC-LFB2-350 NEW	○	500VA	5076	4

Specification

Model		GLC-LFB2-150R/W/B/G	GLC-LFB2-150IR940	GLC-LFB2-150IR940-HH	GLC-LFB2-250	GLC-LFB2-350
Power Supply		100～240VAC	100～240VAC	100～240VAC	100～240VAC	100-240VAC
AC Input Frequency		50/60Hz	50/60Hz	50/60Hz	50/60Hz	50/60Hz
Power Consumption		Max.100VA	Max.90VA	Max.90VA	Max.300VA	Max.500VA
Color		●○●●	IR940	IR940	○	○
Lux.		Approx 200,000 lx(WD:50mm)	77mw/cm² (WD:50mm)	47mw/cm² (WD:50mm)	520,000 lx(WD:50mm)	910,000 lx(WD:50mm/Ø6)
Control Method	Internal	Adjust by knob	Adjust by knob	Adjust by knob	Adjust by knob	Adjust by Knob
	External	AD	AD	AD	RS232/IO/AD	RS232/IO/AD
Cooling Ambient	Ambient Temperature Range	5～35˚C	5～35˚C	5～35˚C	5～35˚C	5～35˚C
	Ambient Humidity Range	30～80% RH	30～80% RH	30～80% RH	30～80% RH	30～80% RH
Cooling Method		Air cooled with fan	Air cooled with fan	Air cooled with fan	Air cooled with fan	Air cooled with fan
Size		210(L)x100(W)x120(H)	210(L)x100(W)x120(H)	210(L)x100(W)x120(H)	300(L)x180(W)x140(H)	300(L)x180(W)x140(H)
Weight		1872	1735	1872	5076	5076

Fiber-optic Light Guide

Optional Accessories

Model	Spot Diameter	Length	Weight(g)	Dimension
ALC-MOFB-MSG6-1100S	ϕ 8mm	1.1 M	230	5
ALC-MOFB-MSG6-2200S	ϕ 8mm	2.2 M	290	

Spectral characteristics

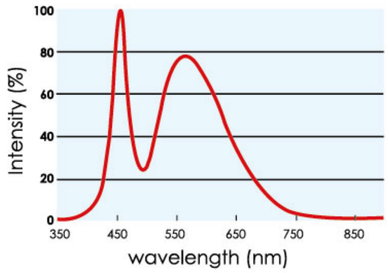

Dimensional Diagrams(mm)

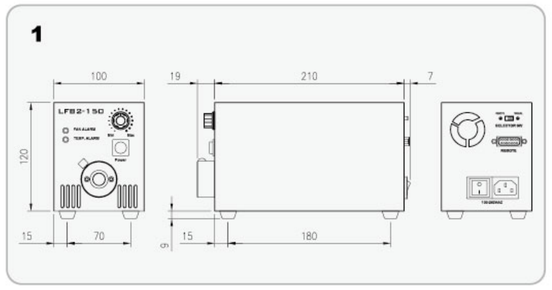

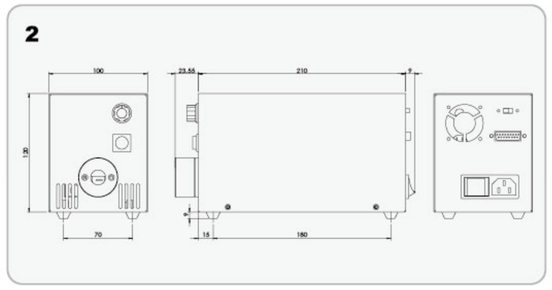

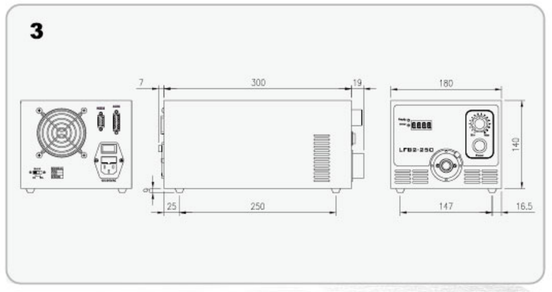

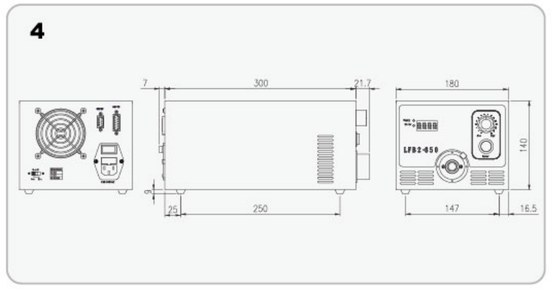

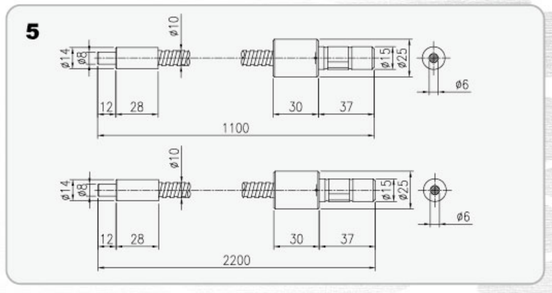

Parallel Lights

Outline

Parallel lighting suppresses the diffusion to achieve the high precise performance on inspection.

Feature

1. Improving lighting diffusion, ideal for outline inspection.
2. Wide range WD, best choice for long distance inspection.
3. Inspection of high accuracy dimensional measurement.

Major applications

1. Applied to slight defect detection.
2. Motor parts, electronic components or pill packing.
3. Gap inspection of soldering tin and connector.

Available Models

Model	Color	Power Consumption	Working Distance(mm)	Weight (g)	Dimension
GL-PL50R	●	700mA/3W	300-450	254	1
GL-PL50W/B/G	○●●	700mA/3W			
GL-PL68R	●	650mA/7.5W	Refer to P.69	1110	2
GL-PL68W/B/G	○●●	650mA/10.8W			
GL-PL2-26R	●	700mA/3W	23-46	267	3
GL-PL2-26W/B/G	○●●	700mA/3W			
GL-PL2-36R	●	700mA/3W	36-72	350	4
GL-PL2-36W/B/G	○●●	700mA/3W			
GL-PL2-48R	●	700mA/3W	43-86	416	5
GL-PL2-48W/B/G	○●●	700mA/3W			
GL-PL2-64 R	●	700mA/3W	63-126	805	6
GL-PL2-64 W/B/G	○●●	700mA/3W			
GL-PL2-80 R	●	700mA/3W	76-152	1531	7
GL-PL2-80 W/B/G	○●●	700mA/3W			
GL-PL2-100 R	●	700mA/3W	86-172	3062	8
GL-PL2-100 W/B/G	○●●	700mA/3W			
GL-PL2-120 R	●	700mA/3W	93-186	3674	9
GL-PL2-120 W/B/G	○●●	700mA/3W			
GL-PL2-150 R	●	700mA/3W	100-200	5630	10
GL-PL2-150 W/B/G	○●●	700mA/3W			
GL-PL2-190R	●	700mA/3W	110-220	6124	11
GL-PL2-190W/B/G	○●●	700mA/3W			
GL-PL2-240R	●	700mA/3W	135-270	7400	12
GL-PL2-240W/B/G	○●●	700mA/3W			

Model explanation

GL-PL- □□○

- Color
- Light-emitting area

GL-PL68 Illuminance Curve

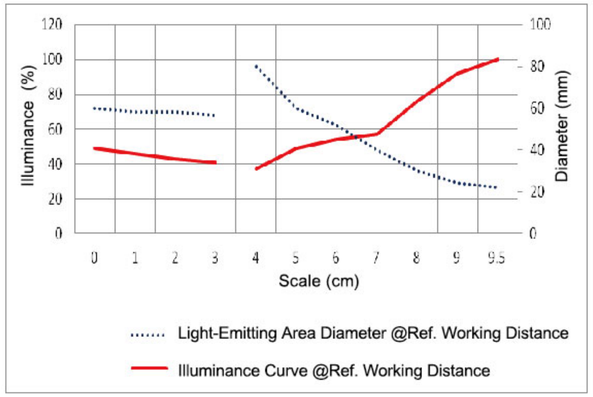

Luminous intensity distribution characteristics

PL68W Graph

Illuminate Height:5CM,10CM,15CM

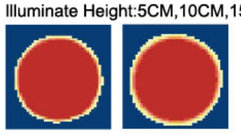

Brightness level 0 — 100

Working distance & Lighting-emitting area

Scale(cm)	0	1	2	3	4	5	6	7	8	9	9.5
Ref. Working Distance(cm)	5	5	5	5	100	82	65	99	82	73	67
Light-Emitting-Area Diameter(cm)	72	70	70	68	80	60	52	40	30	24	22

Dimmer for Parallel Light

Available Models

Power Model	Power Requirement	Ampere	Connector	Output Type	Dimension	Weight (g)
GLC-RPI650-RS232	AC100V~AC240V	650mA	SMP-03V*2	Current control	13	1922
GLC-DPI270-RS232		700mA			14	1030
GLC-DPI470-RS232	AC100V~AC240V	700mA	SMP-03V*4	Current control	15	1540
GLC-PI170			SMP-03V*1		16	580

Dimensional Diagrams(mm)

1

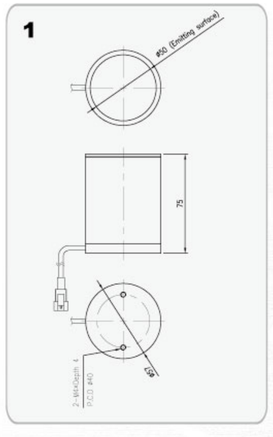

2

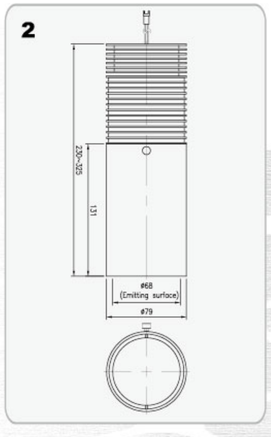

3

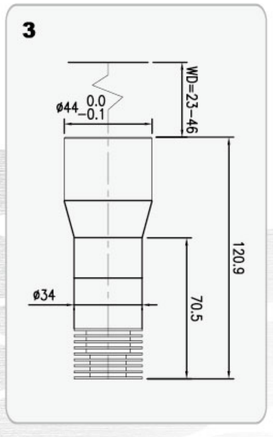

4

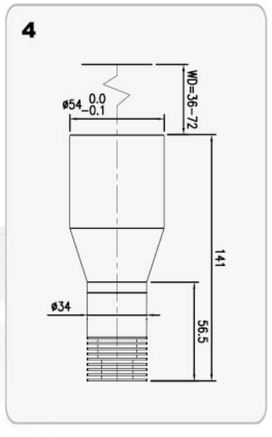

5

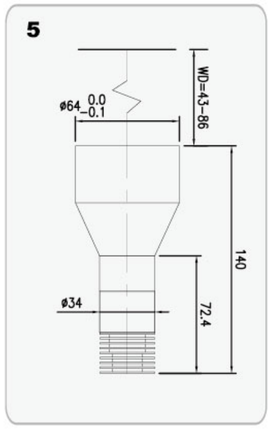

6

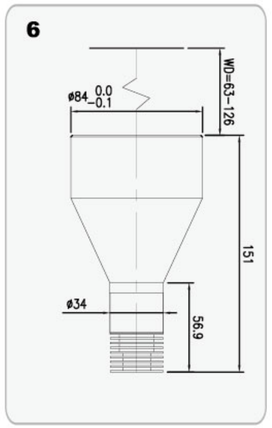

7

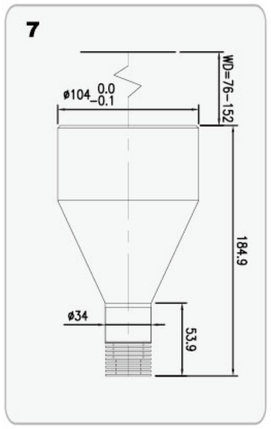

8

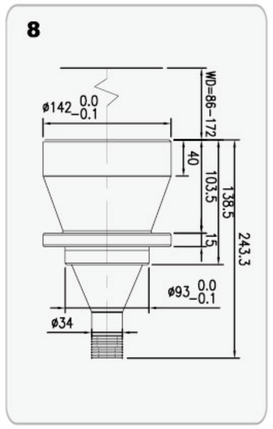

9

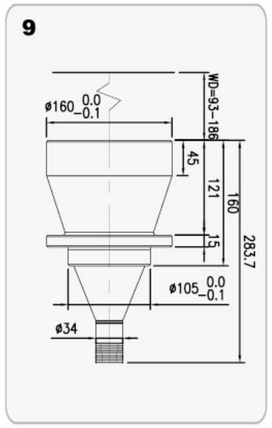

10

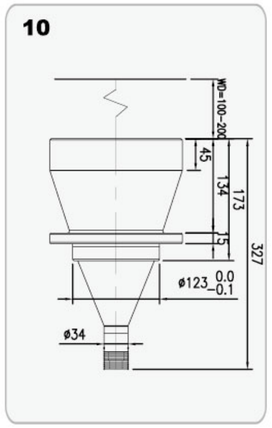

11

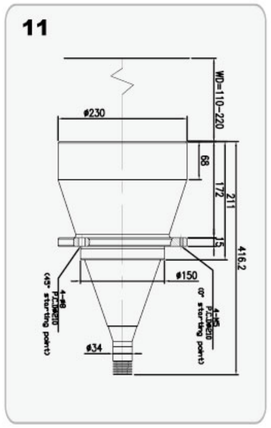

12

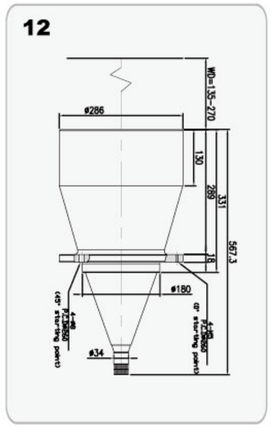

13

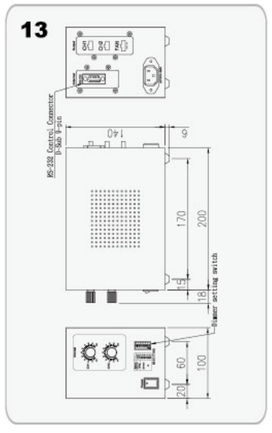

14

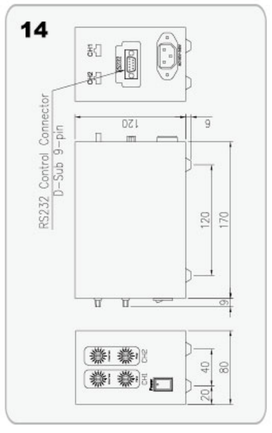

15

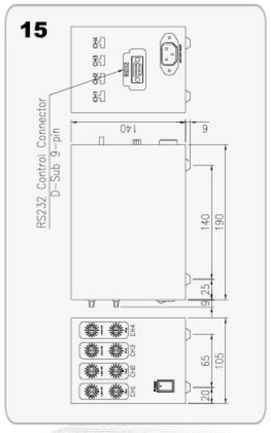

16

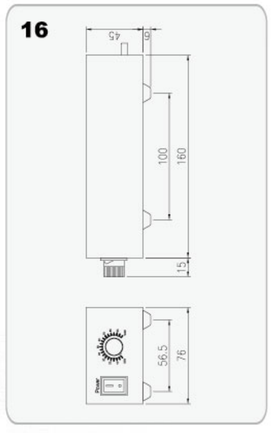

Parallel Coaxial Lights

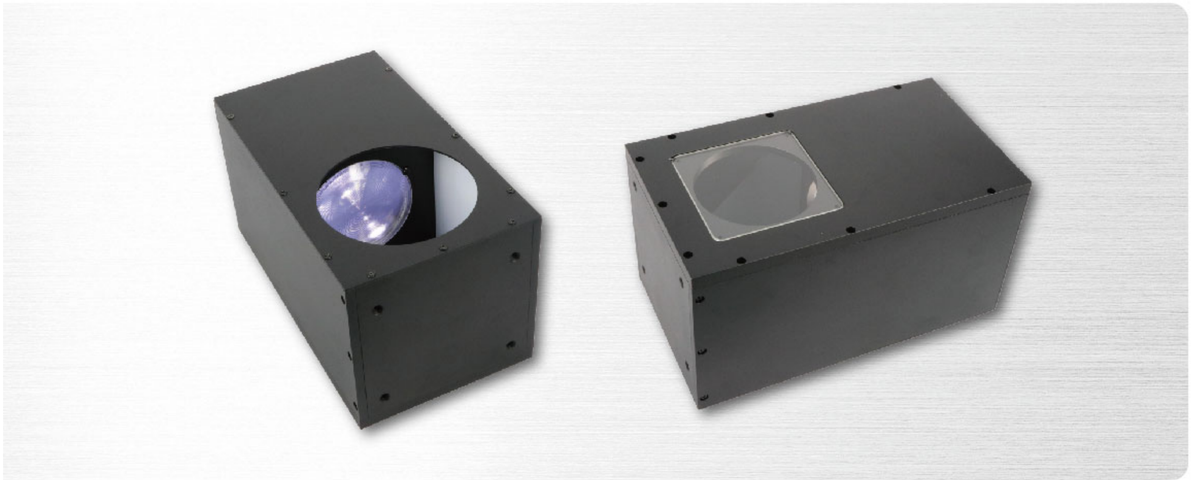

Outline

Parallel lighting suppresses the diffusion to achieve the high precise performance on inspection.

Feature

1. Improving lighting diffusion, ideal for outline inspection.
2. Inspection of high accuracy dimensional measurement.

Major applications

1. Motor parts, electronic components or pill packing
2. Gap inspection of soldering tin and connector

Model explanation

GL-PIFV □□○

□ — Light-emitting area ○ — Color

Available Models

Model	Color	Power Consumption	Weight (g)	Dimension
GL-PIFV38R	●	700mA/3W	480	1
GL-PIFV38W/B/G	○●●	700mA/3W		
GL-PIFV38IR	●	700mA/3W		
GL-PIFV50R	●	700mA/3W	708	2
GL-PIFV50W/B/G	○●●	700mA/3W		
GL-PIFV50IR	●	700mA/3W		

Luminous intensity distribution characteristics

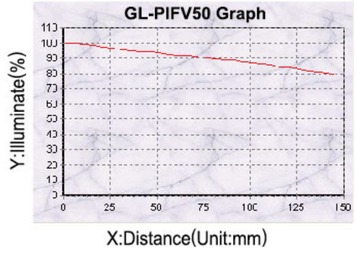

Illuminate Height: 2CM, 5CM, 10CM

Imaging examples

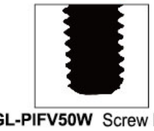

GL-PIFV50W Screw Edge

GL-PIFV50W Connector Characters

Dimensional Diagrams(mm)

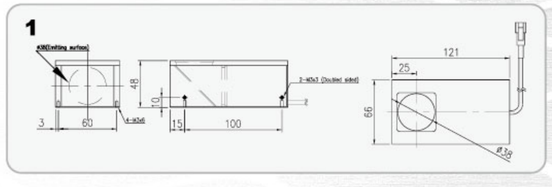

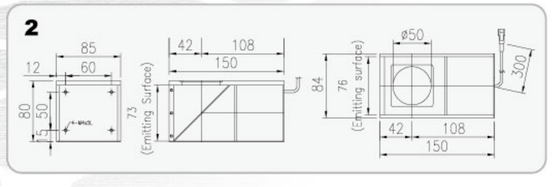

Wafer Lighting Sourc

Outline

Adjustable focal length. Provide 6 ~12inch light spot to inspect surface defects.

Feature

1. Holder is provided to adjust the lighting position.
2. Color temperature can be customized.

Available Models

Model	Color	Weight (g)	Dimension
GL-WA80W	○	4297	1
GL-WA80W-A	○	4337	2
GL-WA80W-3100K	○	4297	3

Specification

Model	GL-WA80W/GL-WA80W-A	GL-WA80W-3100K
Power Supply	AC100-240V	AC100-240V
AC Input Frequency	50/60HZ	50/60HZ
Current	0.75A	0.5A
Lux.	Min. 6K (WD:600mm)	Max. 23K (WD:600mm)
Spot Diameter	About 6~12inch (Focus adjustable)	About 6~12inch (Focus adjustable)
Cooling Method	Air cooled with fan	Air cooled with fan

Dimensional Diagrams(mm)

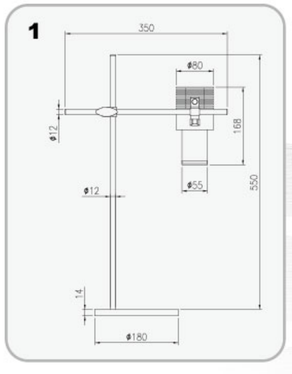

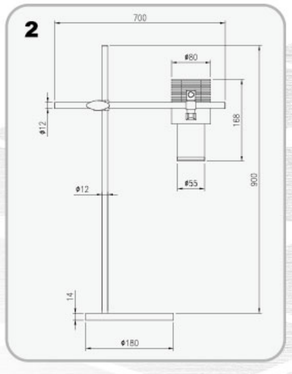

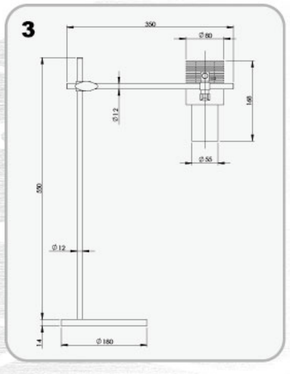

Telecentric lens for four-side image at 90°

Outline

A group of bilateral telecentric mirrors form four 90-angle optical images through special optically designed mirrors and mirrors. The lens used to directly detect the appearance and measure the size of the side of the object without rotationmechanism.

Feature

1. Contains two kinds of light sources: high directivity backlight green light and circular low-angle blue light.
2. Highly directional backlight green light, can make the outline of object and edge contrast clear. There will be nofuzzy grayscale gradients affect the focus and cause misjudgment and affect accuracy.
3. The mechanism is easy to disassemble and assemble and convenient for maintenance.
4. Suitable for detecting the measured objects of screws and fasteners.
5. Customized service is offered.

Dimensional Diagrams(mm)

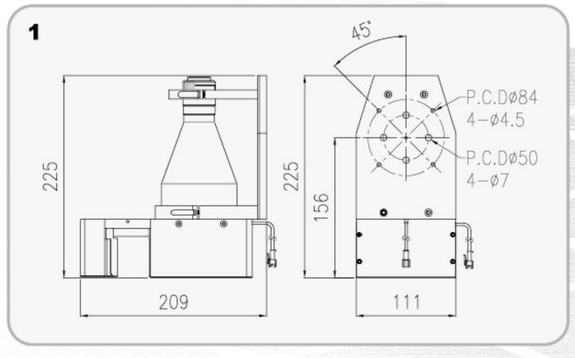

Available Models

Model		ALN-TCA11864
CCD type		1/2"
Object diameter (mm)		8mm Max.
Object height (mm)		32mm Max.
Wavelength range (nm)		450~650
wF/#		4.6
Width (mm)		111
Length (mm)		209
Height (mm)		225
Mount		C-Mount
Input Voltage (V)	Ring illumination	24
Power Consumption (W)		2.6
Input Voltage (V)	Coaxial illumination	24
Power Consumption (W)		12.96
Dimension		1
Weight		2477

LED Power Dimmer

24V10W Module Power Supply

Model	Power Consumption	Output	Connector	Output Type	Dimension	W(g)
GLC-PS2-24V10W-1CH	AC100V~AC240V	24V/10W	SMP-03V*1	N/A	1	426
GLC-PS2-24V10W-2CH		24V/20W	SMP-03V*2		2	464

Outline

Analog voltage output. Adjust the knob to change output value of voltage frequency.

Feature

1. Output DC8~12V, each channel is 10W.
2. Can be used as no segment control by variable voltage.
3. Input voltage is AC100V~AC240V.
4. According to LED quantity to choose 1CH/ 2CH model.

Major applications

1. Dual channel outputs independently controlled by each knob
2. Adjust the knob to change output value of voltage frequency
3. Dual channel outputs independence external ON/OFF controls button

Model explanation

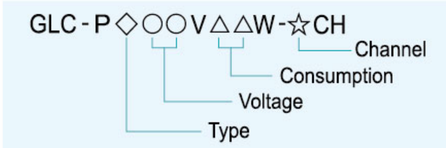

GLC-PS2-24V10W-1CH

GLC-PS2-24V10W-2CH

24V12W PWM Power Supply

Model	Power Consumption	Output	Connector	Output Type	Dimension	W(g)
GLC-PP24V12W-1CH	AC100V~AC240V	24V/12W	SMP-03V*1	N/A	3	711
GLC-PP24V12W-1CH-WA		24V/14.4W	SMP-03V*1		3	711
GLC-PP24V12W-2CH		24V/24W	SMP-03V*2		4	711
GLC-PP24V12W-4CH		24V/48W	SMP-03V*4		5	1050

Outline

1. PWM pulse output. Adjust the knob to change output value of voltage frequency.

Feature

1. Each channel is 12W.
2. Input voltage is AC100V~AC240V.
3. According to LED quantity to choose 1CH/ 2CH/ 4CH model.
4. Use the external control, it can be driven by DC5~24V.

24V 24W PWM Power Supply

Model	Power Consumption	Output	Connector	Output Type	Dimension	W(g)
GLC-PP24V24W-1CH	AC100V~AC240V	24V/24W	SMP-03V*1	N/A	6	711
GLC-PP24V24W-2CH		24V/48W	SMP-03V*2		7	711
GLC-PP24V24W-4CH		24V/96W	SMP-03V*4		8	1050
GLC-PP24V24W-8CH		24V/192W	SMP-03V*8		9	1598

Outline

PWM pulse output. Adjust the knob to change output value of voltage frequency.

Feature

1. Each channel is 24W.
2. Input voltage is AC100V~AC240V.
3. According to LED quantity to choose 1CH/ 2CH/ 4CH/ 8CH model.
4. Use the external control, it can be driven by DC5~24V.

24V48W 256 Digital Power Supply

Model	Power Consumption	Output	Connector	Output Type	Dimension	W(g)
GLC-PD24V48W-1CH	AC100V~AC240V	24V/48W	M12	I/O	10	832
GLC-PD24V48W-2CH		24V/96W			11	1615

Outline

Use the coarse adjustment knob and fine adjustment knob on the panel to perform 16-segment dimming, which can be changed to 256 segments.

Feature

1. PWM pulse output. 24W/CH output power.
2. Mains Voltage: AC100~240V
3. 1CH/2CH available.
4. I/O(8bit) control. The control signal in Extern mode use 5V logic.

24V30W 256 Digital Power Supply

Model	Power Consumption	Output	Connector	Output Type	Dimension	W(g)
GLC-PD24V30W-1CH	AC100V~AC240V	24V/30W	SMP-03V*1	RS-232	12	890
GLC-PD24V30W-2CH		24V/60W	SMP-03V*2		13	1242
GLC-PD24V30W-4CH		24V/120W	SMP-03V*4		14	2090
GLC-PD24V30W-8CH		24V/240W	SMP-03V*8		15	3480

Outline

Use the coarse adjustment knob and fine adjustment knob on the panel to perform 16-segment dimming, which can be changed to 256 segments.

GLC-PD24V30W-1CH

Feature

1. PWM pulse output. 30W/CH output power.
2. Mains Voltage: AC100~240V
3. 1CH/2CH/4CH/8CH available.
4. The external trigger RS-232 control is used, it can be driven by the voltage signal of DC5V.

24V 24W Ethernet Power Supply

Model	Power Consumption	Output	Connector	Output Type	Dimension	W(g)
GLC-PDE24V24W-1CH	AC100V~AC240V	24V/24W	SMP-03V*1	Ethernet	16	737
GLC-PDE24V24W-2CH		24V/48W	SMP-03V*2		17	737
GLC-PDE24V24W-4CH		24V/96W	SMP-03V*4		18	1220
GLC-PDE24V24W-8CH		24V/192W	SMP-03V*8		19	1850

Outline

Press the jog-shuttle knob on the panel to select the control channel, and turn the jog-shuttle knob to select and change to 512-segment dimming settings. External control can also be performed through the network interface.

Feature

1. INT: Control manually by knob. EXT: Control by Ethernet.
2. PWM pulse output. 24W/CH output power.
3. Mains Voltage: AC100~240V
4. 1CH/2CH/4CH/8CH available.

GLC-PDE24V24W-2CH

24V 100W 256 Digital Power Supply

Model	Power Consumption	Output	Connector	Output Type	Dimension	W(g)
GLC-PD24V100W-1CH	AC100V~AC240V	24V/100W	M12	RS-232	20	1512
GLC-PD24V100W-2CH		24V/200W			21	

Outline

Use the coarse adjustment knob and fine adjustment knob on the panel to perform 16-segment dimming, which can be changed to 256 segments.

Feature

1. PWM pulse output. 100W/CH output power.
2. Adjust the output value by coarse adjustment and fine adjustment knob.
3. Mains Voltage: AC100~240V
4. 1CH / 2CH available.
5. RS-232 interfaces.

Dimensional Diagrams(mm)

1
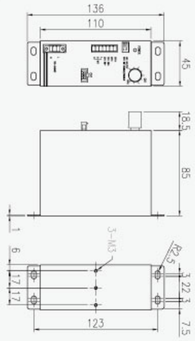

2
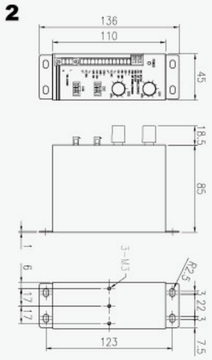

3
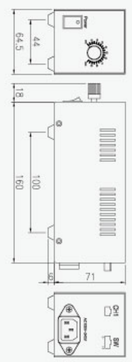

4
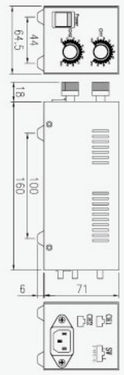

5
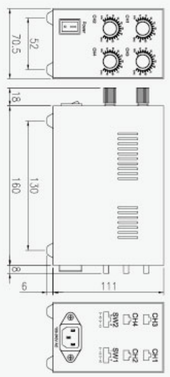

6
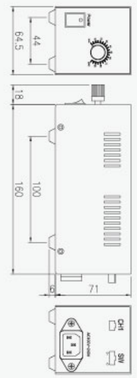

7
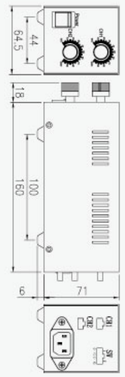

8
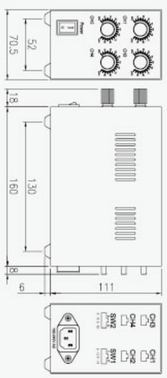

9
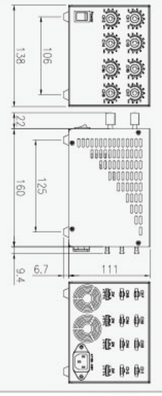

10
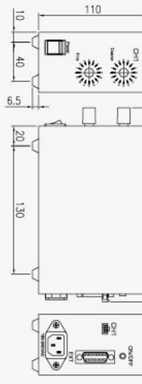

11
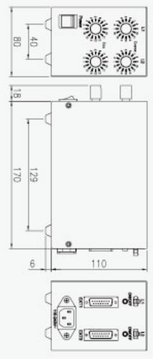

12
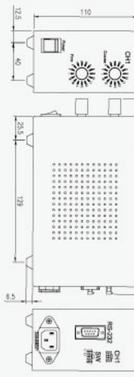

13
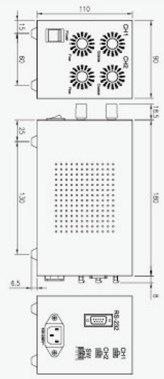

14
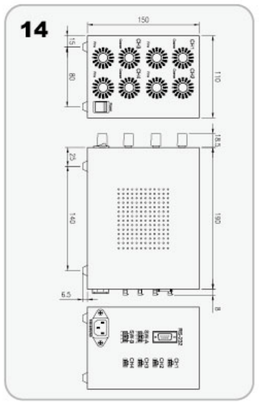

15
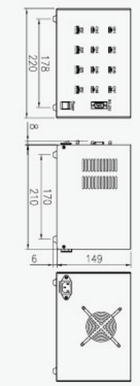

16
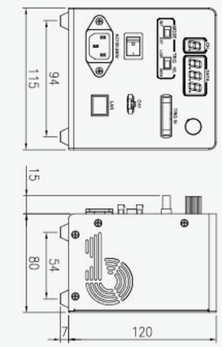

17
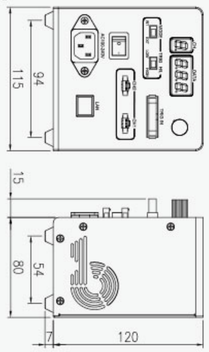

18
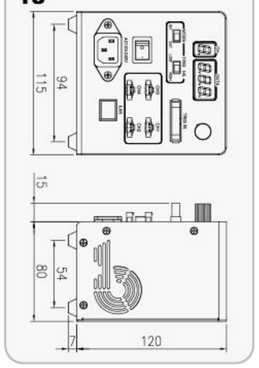

19
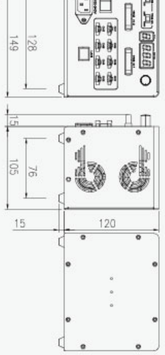

20
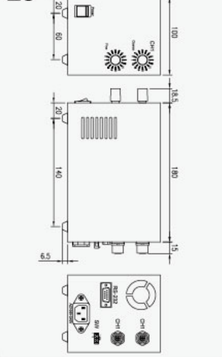

21
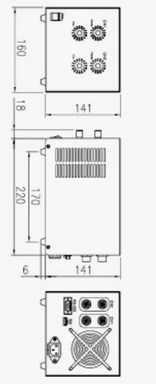

LED Strobe Power Dimmer

Available Models

Model	Power Consumption	Output	Connector	Output Type	Dimension	W(g)
GLC-STB-C2P6-2CH	AC100V~AC240V	12~35V/250W	PLT 8pin	Ethernet / Trigger	1	2124

Model	Power Consumption	Output Voltage		Input Voltage		Output power		Output Type	
		Continous Mode	Overdriving Mode	Continous Mode	Overdriving Mode	Continous Mode	Overdriving Mode		
GLC-STB-C2P10-2CH	DC12V~35V	0V~24V	0V~40V	2A	10A	90W	250W	RS-232	Ethernet
GLC-STB-C2P10-4CH	DC12V~35V	0V~24V	0V~40V	2A	10A	180W	500W	RS-232	Ethernet

Time	External Input	Dimension	W(g)
Min. 50us~30ms	5V~24V	2	863
Min. 50us~30ms	5V~24V	2	863

Dimensional Diagrams(mm)

1

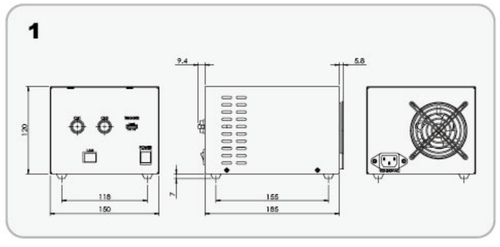

Outline

The strobe dimmer that drives the overdrive function, the brightness of the light can reach several times the strobe light of the general dimmer.

Feature

1. Drive over frequency refers to greatly increasing the voltage and current passing through the light source, and instantly bursting out 3~5 times the luminous brightness.
2. 2CH/4CH, two communication interfaces (RS232/Ethernet) for external control.
3. The constant light source can be converted into an over frequency light source for use.
4. Each channel can output up to 2A(continuous)/10A(pulsed).
5. Dimming parameters can be adjusted by yourself.
6. Output voltage (DC24~48V).

2

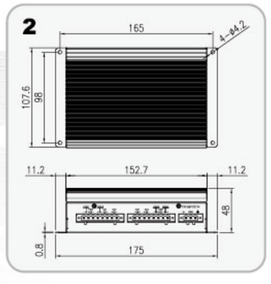

Power Dimmer for LED Lights

Power Dimmer for Spot Light

LED Lights			GLC-PI Series	GLC-DPI Series	
Indirect Lighting	Spot Light Series	GL-HLV28 GL-HLV2-28	GLC-DPI2-135	GLC-DPI235-RS232	GLC-DPI435-RS232
				GLC-DPI235-IO	GLC-DPI435-IO
				GLC-DPI235-AD	GLC-DPI435-AD
		GL-HLV3-24	GLC-DPI2-150	GLC-DPI250-RS232	GLC-DPI450-RS232
				GLC-DPI250-IO	GLC-DPI450-IO
				GLC-DPI250-AD	GLC-DPI450-AD
Special Lighting	Multicolor Series	GL-HLV2-6040RGB	GLC-DPI2-435	GLC-DPI435-RS232	GLC-DPI435-AD
				GLC-DPI435-IO	
	UV Series	GL-HLV2-28UV365 GL-HLV2-28UV	GLC-DPI2-135	GLC-DPI235-RS232	GLC-DPI435-RS232
				GLC-DPI235-IO	GLC-DPI435-IO
				GLC-DPI235-AD	GLC-DPI435-AD

Power Dimmer for 24V Lights

LED Lights			GLC-PS2-24V10W	GLC-PP24V12W	GLC-PP24V24W	GLC-PD24V30W	GLC-PD24V48W	GLC-PD24V100W
Direct Lighting	Direct Ring Series	GL-DR3210-24	V	V	V	V	V	
		GL-DR4218-24	V	V	V	V	V	
		GL-DR5028-24	V	V	V	V	V	
		GL-DR6736-24	V	V	V	V	V	
		GL-DR7035-24	V	V	V	V	V	
		GL-DR9050-24		V	V	V	V	
		GL-DR9550-24		V	V	V	V	
		GL-DR12060-24				V	V	
	Low Angle Direct Ring Series	GL-LDR4822-24	V	V	V	V	V	
		GL-LDR7448-24	V	V	V	V	V	
		GL-LDR10068-24	V	V	V	V	V	
		GL-LDR13296-24		V	V	V	V	
		GL-LDR170134-24			V	V	V	
		GL-FDR7546-24	V	V	V	V	V	
		GL-FDR8454-24	V	V	V	V	V	
		GL-FDR12292-24	V	V	V	V	V	
		GL-FDR156108-24	V	V	V	V	V	
	Bar, Linear & Oblique Series	GL-DB3010-24	V	V	V	V	V	
		GL-DB6020-24	V	V	V	V	V	
		GL-DB11020-24	V	V	V	V	V	
		GL-DB16020-24	V	V	V	V	V	
		GL-DB21020-24	V	V	V	V	V	
		GL-DB26020-24	V	V	V	V	V	
		GL-DB31020-24	V	V	V	V	V	
		GL-DB6034-24	V	V	V	V	V	
		GL-DB11034-24	V	V	V	V	V	
		GL-DB26034-24			V	V	V	
		GL-DB4520-24	V	V	V	V	V	
		GL-DB8020-24	V	V	V	V	V	
Indirect Lighting	Backlight Series	GL-ADM3030-24	V	V	V	V	V	
		GL-ADM3060-24	V	V	V	V	V	
		GL-ADM3090-24	V	V	V	V	V	
		GL-ADM30120-24	V	V	V	V	V	
		GL-ADM6060-24	V	V	V	V	V	
		GL-ADM6090-24	V	V	V	V	V	
		GL-ADM60120-24			V	V	V	
		GL-ADM9090-24			V	V	V	
		GL-ADM90120-24				V	V	
		GL-ADM120120-24				V	V	
		GL-ADM90135-24			V	V	V	
		GL-ADM90180-24			V	V	V	
		GL-ADM90225-24			V	V	V	
		GL-ADM90270-24				V	V	
		GL-ADM90315-24				V	V	
		GL-ADM90360-24				V	V	
		GL-ADM135135-24			V	V	V	
		GL-ADM135180-24				V	V	
		GL-ADM135225-24						V
		GL-ADM135270-24						V
		GL-ADM135315-24						V
		GL-ADM135360-24						V
		GL-ADM180180-24						V
		GL-ADM180225-24						V
		GL-ADM180270-24						V
		GL-ADM180315-24						V

LED Lights			GLC-PS2-24V10W	GLC-PP24V12W	GLC-PP24V24W	GLC-PD24V30W	GLC-PD24V48W	GLC-PD24V100W
Indirect Lighting	Backlights	GL-ADM180360-24						V
		GL-ADM225225-24						V
		GL-ADM225270-24						V
		GL-ADM225315-24						V
		GL-ADM225360-24						V
		GL-ADM270270-24						V
		GL-ADM270315-24						V
		GL-ADM270360-24						V
		GL-ADM315315-24						V
		GL-ADM315360-24						V
		GL-ADM360360-24						V
	High Directivity Backlights	GL-DADM3030-24	V	V	V	V	V	
		GL-DADM6060-24	V	V	V	V	V	
		GL-DADM9090-24			V	V	V	
		GL-DADM120120-24			V	V	V	
	Shadowless Lights	GL-PR6739-24	V	V	V	V	V	
		GL-PR9058-24	V	V	V	V	V	
		GL-PR136108-24				V	V	
		GL-LFR7420-24	V	V	V	V	V	
		GL-DO5411-24	V	V	V	V	V	
		GL-LFR10233-24	V	V	V	V	V	
		GL-LFR12544-24	V	V	V	V	V	
		GL-SRL7420-24	V	V	V	V	V	
		GL-SRL10233-24	V	V	V	V	V	
		GL-SRL12544-24				V	V	
		GL-FPQ4848-24	V	V	V	V	V	
		GL-FPQ7575-24	V	V	V	V	V	
		GL-FPQ152152-24	V	V	V	V	V	
	Coaxial Lights	GL-IFV20-24	V	V	V	V	V	
		GL-IFV34-24	V	V	V	V	V	
		GL-IFV40-24	V	V	V	V	V	
		GL-IFV50-24	V	V	V	V	V	
		GL-IFV70-24			V	V	V	
		GL-IFV100-24			V	V	V	
		GL-IFV130-24						V
		GL-IFV200-24						V
		GL-IFV2-34-24	V	V	V	V	V	
	High Directivity Coaxial Lights	GL-DIFV20-24	V	V	V	V	V	
		GL-DIFV34-24	V	V	V	V	V	
		GL-DIFV40-24	V	V	V	V	V	
		GL-DIFV50-24	V	V	V	V	V	
		GL-DIFV70-24		V	V	V	V	
		GL-DIFV100-24			V	V	V	
		GL-DIFV130-24						V
		GL-DIFV200-24						V
	High Directivity and Intensity Coaxial Lights	GL-DIFV2-40-24	V	V	V	V	V	
		GL-DIFV2-50-24		V	V	V	V	
		GL-DIFV2-70-24			V	V	V	
		GL-DIFV2-100-24			V	V	V	
	Large Dome Lights	GL-DO8454-24	V	V	V	V	V	
		GL-DO12292-24	V	V	V	V	V	
		GL-DO156108-24	V	V	V	V	V	
		GL-DO266210-24				V	V	
		GL-ADO8454-24	V	V	V	V	V	
		GL-ADO12292-24	V	V	V	V	V	
		GL-ADO156108-24			V	V	V	
	Flat Dome Lights	GL-FDO100-24	V	V	V	V	V	
	High Intensity Flat Dome Lights	GL-FDO2-100-24			V	V	V	
	Square Lights	GL-DSQ2-150150-24				V	V	
		GL-DSQ2-208208-24						V
		GL-DSQ2-300300-24						V
		GL-DDSQ150150-24			V	V	V	
		GL-DDSQ208208-24						V
		GL-DDSQ300300-24						V
Special Lighting	Ultraviolet (UV) Lights	GL-DR4218UV365-24	V	V	V	V	V	
		GL-DR5028UV365-24	V	V	V	V	V	
		GL-DR6736UV365-24	V	V	V	V	V	
		GL-DR7035UV365-24	V	V	V	V	V	
		GL-DR9050UV365-24	V	V	V	V	V	
		GL-LDR7448UV365-24	V	V	V	V	V	
		GL-LDR10068UV365-24	V	V	V	V	V	
		GL-DB6020UV365-24	V	V	V	V	V	
		GL-DB6020UV-24	V	V	V	V	V	
		GL-DB11020UV365-24	V	V	V	V	V	
		GL-DB16020UV365-24	V	V	V	V	V	
		GL-DB21020UV365-24	V	V	V	V	V	
		GL-DB26020UV365-24	V	V	V	V	V	
		GL-DB31020UV265-24	V	V	V	V	V	
		GL-IFV34UV-24	V	V	V	V	V	
		GL-IFV40UV365-24	V	V	V	V	V	
		GL-IFV40UV-24	V	V	V	V	V	

Optional Accessories for LED Light Source

Diffusion Plate

Model	Light Source
AL-DR3210-DP	GL-DR3210
AL-DR4218-DP	GL-DR4218
AL-DR5028-DP	GL-DR5028
AL-DR6736-DP	GL-DR6736
AL-DR6746-DP	GL-DR6746
AL-DR7035-DP	GL-DR7035
AL-DR9050-DP	GL-DR9050
AL-DR9550-DP	GL-DR9550
AL-DR12060-DP	GL-DR12060
AL-DR16595-DP	GL-DR16595
AL-LDR4822-D	GL-LDR4822
AL-LDR5028-D	GL-LDR5028
AL-LDR7448-D	GL-LDR7448
AL-LDR10068-D	GL-LDR10068
AL-LDR13296-D	GL-LDR13296
AL-LDR170134-D	GL-LDR170134
AL-FDR7546-D	GL-FDR7546
AL-FDR8454-D	GL-FDR8454
AL-FDR12292-D	GL-FDR12292
AL-FDR156108-D	GL-FDR156108
AL-DB4520-DP	GL-DB4520
AL-DB8020-DP	GL-DB8020
AL-DB6020-DP	GL-DB6020
	GL-DB6020-4
AL-DB11020-DP	GL-DB11020
	GL-DB11020-4
AL-DB16020-DP	GL-DB16020
	GL-DB16020-4
AL-DB21020-DP	GL-DB21020
AL-DB26020-DP	GL-DB26020
AL-DB31020-DP	GL-DB31020
AL-DB36020-DP	GL-DB36020
AL-DB41020-DP	GL-DB41020
AL-DB46020-DP	GL-DB46020
AL-DB51020-DP	GL-DB51020
AL-DB6034-DP	GL-DB6034
AL-DB11034-DP	GL-DB11034
AL-DB16034-DP	GL-DB16034

Adapter

Model	Light Source
AL-DB21034-DP	GL-DB21034
AL-DB26034-DP	GL-DB26034
AL-DB31034-DP	GL-DB31034
AL-MC9050-DP	GL-MC9050W

Extension Tube

Model	Spec.
GLA-LAR18	GL-DR6736
GLA-LAR32	GL-DR6736
GLA-LAR50	GL-DR9050
	GL-DR9550
GLA-LAR4218-M27	GL-DR4218
GLA-LAR4822-M25.5	GL-DR4822
GLA-LAR5028	GL-DR5028
GLA-LAR6736	GL-DR6736
GLA-LAR7035-M25.5	GL-DR7035
GLA-LAR7035-M27	GL-DR7035
GLA-LAR7035-M30.5	GL-DR7035
GLA-LAR9050-M27	GL-DR9050
MLA-IFV20-M25.5	GL-IFV20
MLA-IFV20-M27	
MLA-IFV20-M30.5	
MLA-IFV34-M25.5	GL-IFV34
MLA-IFV34-M27	
MLA-IFV34-M30.5	
MLA-IFV40-M25.5	GL-IFV40
MLA-IFV40-M27	
MLA-IFV40-M30.5	
MLA-IFV50-M25.5	GL-IFV50
MLA-IFV50-M27	
MLA-IFV50-M30.5	
MLA-IFV70-M25.5	GL-IFV70
MLA-IFV70-M27	
MLA-IFV70-M30.5	

Extension Cord

Model	Length
AL-ESM2P1M-W	1M
AL-ESM2P2M-W	2M
AL-ESM2P3M-W	3M
AL-ESM2P5M-W	5M
AL-ESM2P9M-W	9M
AL-ESM3P1M-W (HLV)	1M
AL-ESM3P2M-W (HLV)	2M
AL-ESM3P3M-W (HLV)	3M
AL-ESM3P5M-W (HLV)	5M
AL-ESM3P9M-W (HLV)	9M
AL-EUT2P2M-W	2M
AL-EUT2P3M-W	3M
AL-ETBD4P2M-W	2M
AL-ETBD4P5M-W	5M
AL-ESM2P1-2-W	0.2M
AL-ESM2P1-4-W	0.2M
AL-ESM2PM3PFV4-W	0.2M
AL-ESM3PM2PF-W	0.2M
AL-RESM3P1M-W	1M
AL-RESM3P2M-W	2M
AL-RESM3P3M-W	3M
AL-RESM3P5M-W	5M
AL-RESM3P9M-W	9M

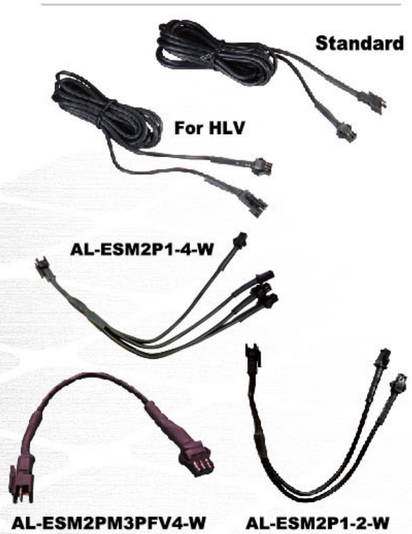

Optional Accessories for CCD - Filter NEW

Outline

The filter is to prevent the influence of external ambient light, and only allow light of a specific range of wavelengths to pass through.

Feature

1. Special coating technology can increase light transmittance and reduce light reflection
2. 3 sizes for lens interface: M25.5/M27.0/M30.5
3. Totally 24 types of filters

Model explanation

ALN-F-BP△△△-○

- mount size
- wavelength
- protect
- band

Model	ALN-F-BP365-25.5/27/30.5
Color	Ultraviolet
Lens Material	Glass
Wavelength Range	350~395nm
Wavelength Tolerance	+/- 10nm
Light Transmittance	>75%

Model	ALN-F-BP470-25.5/27/30.5
Color	Blue
Lens Material	Glass
Wavelength Range	420~490nm
Wavelength Tolerance	+/- 10nm
Light Transmittance	>90%

Model	ALN-F-BP525-25.5/27/30.5
Color	Green
Lens Material	Glass
Wavelength Range	500~550nm
Wavelength Tolerance	+/- 10nm
Light Transmittance	>88%

Model	ALN-F-BP625-25.5/27/30.5
Color	Red
Lens Material	Glass
Wavelength Range	615~700nm
Wavelength Tolerance	+/- 10nm
Light Transmittance	>88%

Model	ALN-F-BP850-25.5/27/30.5
Color	Infrared
Lens Material	Glass
Wavelength Range	820~910nm
Wavelength Tolerance	+/- 10nm
Light Transmittance	>90%

Model	ALN-F-BP940-25.5/27/30.5
Color	Infrared
Lens Material	Glass
Wavelength Range	930~1,100nm
Wavelength Tolerance	+/- 10nm
Light Transmittance	>90%

Model	ALN-F-BPVS-25.5/27/30.5
Lens Material	Glass
Wavelength Range	410~690nm
Wavelength Tolerance	+/- 10nm
Light Transmittance	>90%

Model	ALN-F-PROTECT-25.5/27/30.5
Lens Material	Glass
Wavelength Range	400~700nm
Wavelength Tolerance	+/- 10nm
Light Transmittance	>95%

Dimensional Diagrams(mm)

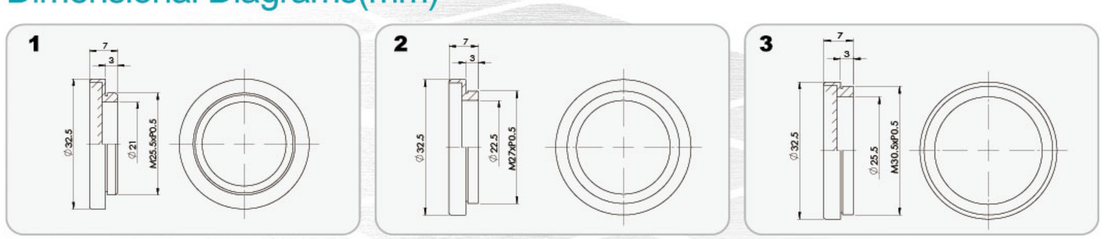

Optional Accessories for CCD - Extension Tube

Model	Spec.
ALN-EXT-05	0.5mm
ALN-EXT-10	1.0mm
ALN-EXT-20	2.0mm
ALN-EXT-50	5.0mm
ALN-EXT-100	10.0mm
ALN-EXT-200	20.0mm
ALN-EXT-400	40.0mm

Optional Accessories for CCD- POE Card

AV-PCIE-POE2

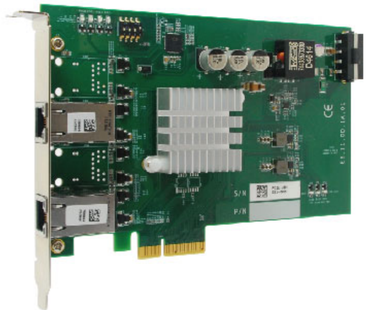

AV-PCIE-POE4

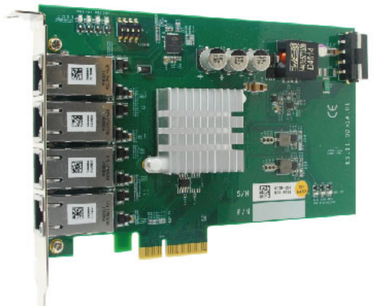

AV-CAT6-RJ45-W-3M
AV-CAT6-RJ45-W-5M

Dimensional Diagrams(mm)

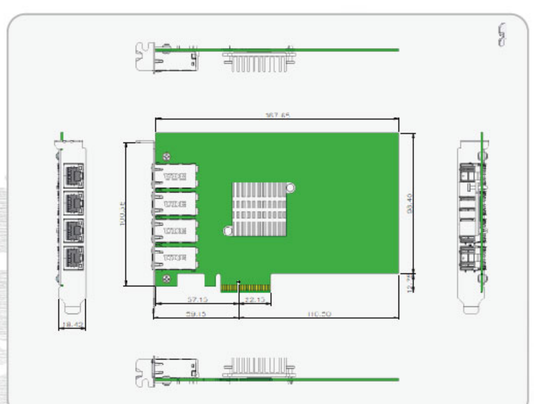

CE & RoHS Certificate

>>>CE

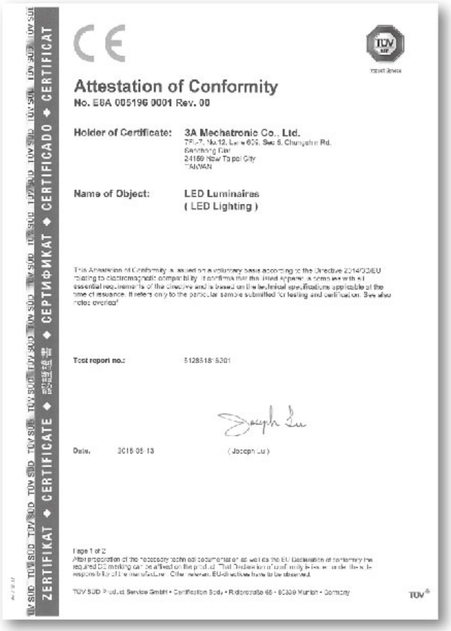

CE

Attestation of Conformity
No. E8A 005196 0001 Rev. 00

Holder of Certificate: 3A Mechatronic Co., Ltd.
7F-7, No.12, Ln. 609, Sec. 5, Chongshin Rd.
Sanchong City
24161 New Taipei City
TAIWAN

Name of Object: LED Luminaires
(LED Lighting)

This Attestation of Conformity is issued on a voluntary basis according to the Directive 2014/30/EU relating to electromagnetic compatibility. It confirms that the listed equipment complies with all essential requirements of the directive and is based on the technical specifications applicable at the time of issuance. It refers only to the particular sample submitted for testing and certification. See also notes overleaf.

Test report no.: 5128518/ 5301

Date. 2018-05-13 (Joseph Liu)

Page 1 of 2
After preparation of the necessary technical documentation as well as the EU Declaration of conformity the required CE marking can be affixed on the product. That Declaration of conformity is issued under the sole responsibility of the manufacturer. Other relevant EU directives have to be observed.

TÜV SÜD Product Service GmbH • Certification Body • Ridlerstraße 65 • 80339 Munich • Germany

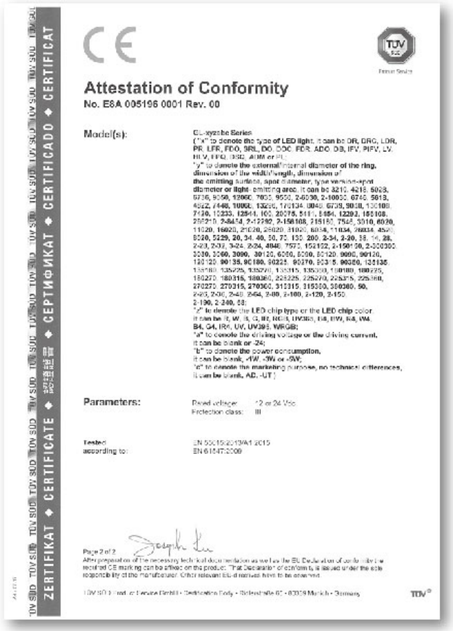

CE

Attestation of Conformity
No. E8A 005196 0001 Rev. 00

Model(s): [illegible]

Parameters: Rated voltage: 12 or 24 Vdc
Protection class: III

Tested according to: EN 55015:2013/A1:2015
EN 61547:2009

Page 2 of 2
After preparation of the necessary technical documentation as well as the EU Declaration of conformity the required CE marking can be affixed on the product. That Declaration of conformity is issued under the sole responsibility of the manufacturer. Other relevant EU directives have to be observed.

TÜV SÜD Product Service GmbH • Certification Body • Ridlerstraße 65 • 80339 Munich • Germany

>>>RoHS

ELECTRONICS TESTING CENTER, TAIWAN

8, Lane 70, Wan-Ming Rd., Lo-Shan Tsun
Kui-Shan, Taoyuan County, Taiwan 33383
http://www.etc.org.tw
03-328-0026

Certificate
of Conformity for Directive 2002/95/EC (RoHS)

This is to certify enclosure(s) are in compliance with Directive 2002/95/EC on the Restriction of The Use of Certain Hazardous Substance (RoHS) in Electrical and Electronic Equipment.

Applicant: 3A Mechatronic Co., Ltd.
7F-7, No. 12, Lane 609, Chung-Hsin Rd., Sec. 5, San-Chung City, Taipei Hsien, Taiwan

Product/Sample: Shadowless Type LED

Style/Type: PR-67/39R · PR-67/39W · PR-67/39B · PR-67/39G · PR-67/39Y · PR-67/39UV · PR-67/39IR · PR-90/58R · PR-90/58W · PR-90/58B · PR-90/58G · PR-90/58Y · PR-90/58UV · PR-90/58IR · PR-136/108R · PR-136/108W · PR-136/108B · PR-136/108G · PR-136/108Y · PR-136/108UV · PR-136/108IR

Certificate No: 08-09-QAC-136
Date of Issue: October 17, 2008

This certificate of conformity is based on evaluated sample(s) of the product mentioned above. It does not imply the assessment of production of the product. The result of this evaluation is available on the ROHS Assessment Report, which is in conformity with 2005/618/EC Article 1, amending RoHS Directive 2002/95/EC.

Peter Huang
Manager
Electronics Testing Center, Taiwan

To pursue excellence in service quality with a dedicated working attitude.

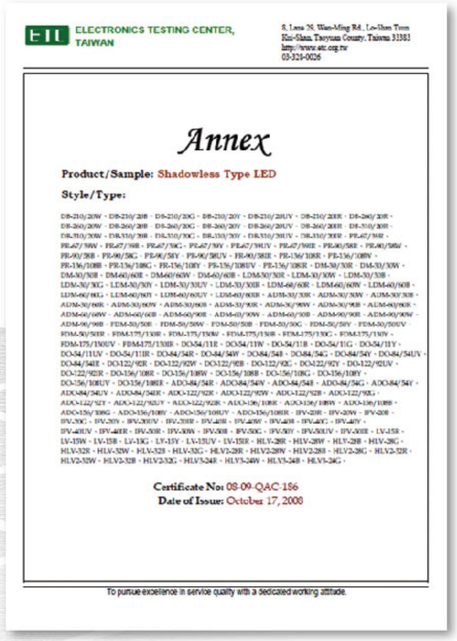

ELECTRONICS TESTING CENTER, TAIWAN

8, Lane 70, Wan-Ming Rd., Lo-Shan Tsun
Kui-Shan, Taoyuan County, Taiwan 33383
http://www.etc.org.tw
03-328-0026

Annex

Product/Sample: Shadowless Type LED

Style/Type:

DR-210/20W · DR-210/20B · DR-210/20G · DR-210/20Y · DR-210/20UV · DR-210/20IR · DR-260/20R · DR-260/20W · DR-260/20B · DR-260/20G · DR-260/20Y · DR-260/20UV · DR-260/20IR · DR-310/30R · DR-310/30W · DR-310/30B · DR-310/30G · DR-310/30Y · DR-310/30UV · DR-310/30IR · PR-67/36R · PR-67/36W · PR-67/36B · PR-67/36G · PR-67/36Y · PR-67/36UV · PR-67/36IR · PR-90/58R · PR-90/58W · PR-90/58B · PR-90/58G · PR-90/58Y · PR-90/58UV · PR-90/58IR · PR-136/108R · PR-136/108W · PR-136/108B · PR-136/108G · PR-136/108Y · PR-136/108UV · PR-136/108IR · DM-30/30R · DM-30/30W · DM-30/30B · DM-60/60R · DM-60/60W · DM-60/60B · LDM-30/30R · LDM-30/30W · LDM-30/30B · LDM-30/30G · LDM-30/30Y · LDM-30/30UV · LDM-30/30IR · LDM-60/60R · LDM-60/60W · LDM-60/60B · LDM-60/60G · LDM-60/60Y · LDM-60/60UV · LDM-60/60IR · ADM-30/30R · ADM-30/30W · ADM-30/30B · ADM-30/60R · ADM-30/60W · ADM-30/60B · ADM-30/90R · ADM-30/90W · ADM-30/90B · ADM-60/60R · ADM-60/60W · ADM-60/60B · ADM-60/90R · ADM-60/90W · ADM-60/90B · ADM-90/90R · ADM-90/90W · ADM-90/90B · FDM-50/50R · FDM-50/50W · FDM-50/50B · FDM-50/50G · FDM-50/50Y · FDM-50/50UV · FDM-50/50IR · FDM-175/130R · FDM-175/130W · FDM-175/130B · FDM-175/130G · FDM-175/130Y · FDM-175/130UV · FDM-175/130IR · DO-54/11R · DO-54/11W · DO-54/11B · DO-54/11G · DO-54/11Y · DO-54/11UV · DO-54/11IR · DO-84/54R · DO-84/54W · DO-84/54B · DO-84/54G · DO-84/54Y · DO-84/54UV · DO-84/54IR · DO-122/92R · DO-122/92W · DO-122/92B · DO-122/92G · DO-122/92Y · DO-122/92UV · DO-122/92IR · DO-156/108R · DO-156/108W · DO-156/108B · DO-156/108G · DO-156/108Y · DO-156/108UV · DO-156/108IR · ADO-84/54R · ADO-84/54W · ADO-84/54B · ADO-84/54G · ADO-84/54Y · ADO-84/54UV · ADO-84/54IR · ADO-122/92R · ADO-122/92W · ADO-122/92B · ADO-122/92G · ADO-122/92Y · ADO-122/92UV · ADO-122/92IR · ADO-156/108R · ADO-156/108W · ADO-156/108B · ADO-156/108G · ADO-156/108Y · ADO-156/108UV · ADO-156/108IR · IPV-20R · IPV-20W · IPV-20B · IPV-20G · IPV-20Y · IPV-20UV · IPV-20IR · IPV-40R · IPV-40W · IPV-40B · IPV-40G · IPV-40Y · IPV-40UV · IPV-40IR · IPV-80R · IPV-80W · IPV-80B · IPV-80G · IPV-80Y · IPV-80UV · IPV-80IR · LV-15R · LV-15W · LV-15B · LV-15G · LV-15Y · LV-15UV · LV-15IR · HLV-28R · HLV-28W · HLV-28B · HLV-28G · HLV-32R · HLV-32W · HLV-32B · HLV-32G · HLV-32Y · HLV2-28R · HLV2-28W · HLV2-28B · HLV2-28G · HLV2-32R · HLV2-32W · HLV2-32B · HLV2-32G · HLV3-24R · HLV3-24W · HLV3-24B · HLV3-24G ·

Certificate No: 08-09-QAC-136
Date of Issue: October 17, 2008

To pursue excellence in service quality with a dedicated working attitude.

ISO Certificate

CERTIFICATE

ARES

The Governing Board of
ARES International Certification Co., Ltd.
Hereby Grants To:

3A Mechatronic Co., Ltd.

7F.-7 and 10F.-15, No.12, Ln. 609, Sec. 5, Chongxin Rd., Sanchong Dist., New Taipei City 241, Taiwan (R.O.C.)

Has been assessed and found to be in accordance with the requirements of standard detailed below
ISO 9001:2015

Scope
Design, manufacturing and distribution of LED lighting, power dimmer, AOI (Automated Optical Inspection) related products.

Certificate No.: ARES/TW/I2106056Q
Certificate Issue Date: 2021-06-10
Registration Expiration Date: 2024-06-09

The time interval between each surveillance audit and the last on-site audit shall not exceed 12 months, and the organization must obtain "surveillance audit approval notification" issued by ARES to ensure the validity of the certificate.

IAS ACCREDITED Management Systems Certification Body ACC NO. MSCB - 171
IAF MEMBER OF MULTILATERAL RECOGNITION ARRANGEMENT

Authorized by : Chiaoyuwen

ARES International Certification Co., Ltd.
No.12-2, Ln. 187, Wenping Rd., Anping Dist., Tainan City 708, Taiwan
TEL / 06-295 9696 (Rep. Line) FAX / 06-295 9667
www.ares-registration.com

CERTIFICATE

ARES

特此授予:
丞基技研股份有限公司
新北市三重區重新路五段609巷12號10樓之15 / 7樓之7

管理體系符合
ISO 9001:2015

驗證範圍
LED光源、調光器、自動光學檢測相關產品之設計、 製造及銷售

證書編號: ARES/TW/I2106056Q
發證日期: 2021-06-10
有效日期: 2024-06-09

每次監督審核時間與上次現場審核時間間隔不得超過12個月，且必須取得ARES發出的監督審核通過通知以確保證書有效性。

IAS ACCREDITED Management Systems Certification Body ACC NO. MSCB - 171
IAF MEMBER OF MULTILATERAL RECOGNITION ARRANGEMENT

批准: Chiaoyuwen

ARES International Certification Co., Ltd.
No.12-2, Ln. 187, Wenping Rd., Anping Dist., Tainan City 708, Taiwan
TEL / 06-295 9696 (Rep. Line) FAX / 06-295 9667
www.ares-registration.com

Trademark Certificate

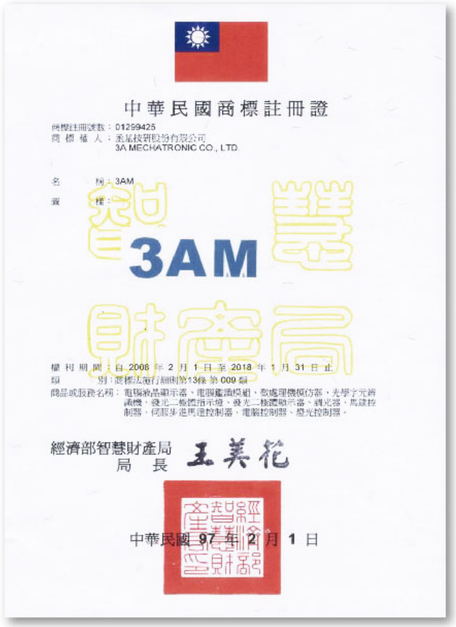

中華民國商標註冊證

商標註冊號數：01299425
商標權人：丞基技術股份有限公司
3A MECHATRONIC CO., LTD.

名稱：3AM
圖樣：

3AM

權利期間：自 2008 年 2 月 1 日至 2018 年 1 月 31 日止
類別：依標示施行細則第13條 第 009 類
商品或服務名稱：電腦螢幕顯示器、電腦產品模組、數位電機模擬器、光學式光碟機、發光二極體指示燈、發光二極體顯示器、調光器、馬達控制器、伺服馬達控制器、電腦控制器、發光控制器。

經濟部智慧財產局
局長 王美花

中華民國 97 年 2 月 1 日

中華民國商標註冊證

商標註冊號數：01570077
商標權人：丞基技術股份有限公司

名稱：3AMechatronic（彩色）
圖樣：

3AMechatronic

權利期間：自 2014 年 3 月 16 日起至 2024 年 3 月 15 日止
類別：依標示施行細則第10條 第 009類
商品或服務名稱：電子儀表、電子佈告欄、電腦產品顯示器、錄影用螢幕顯示器、錄放影機、光電轉換器、發光顯示、數位式錄放機、發光二極體、發光二極體指示燈、光源、發光控制器、調光器、電子防盜設備、光度計。

經濟部智慧財產局
局長 王美花

中華民國 102 年 3 月 16 日

第 11406533 号

商标注册证

3AMechatronic

指定颜色

核定使用商品(第 9 类)

电脑软件（录制好的）；电子出版物（可下载）；荧光电子标签；信号灯；光通讯设备；闪光灯（摄影）；光学灯；发光二极管（LED）；电缆材料（电线、电缆）；电池（截止）

注 册 人 丞基技术股份有限公司

注册地址 中国台湾新北市三重区重新路五段 609 巷 12 号 7 楼之 7

注册有效期限 自公元 2014 年 01 月 28 日 至 2024 年 01 月 27 日止

局长签发 许瑞表

第 11423107 号

商标注册证

3AMechatronic

指定颜色

核定使用商品(第 11 类)

发光二极管（LED）照明器具；运载工具灯具；空气净化用杀菌灯；照明用提灯；烧烤器具；干燥设备；烘罐设备；中央供暖装置用散热器；酒店暖器械（日光浴床）；杀毒设备（截止）

注 册 人 丞基技术股份有限公司

注册地址 中国台湾新北市三重区重新路五段 609 巷 12 号 7 楼之 7

注册有效期限 自公元 2014 年 02 月 07 日 至 2024 年 02 月 06

局长签发 许瑞表

3AM Worldwide

MEMO

Distribution products: Telecentric lens & CCTV lens

Tokyo HQ Registered

www.computar.com

Tokyo HQ Registered

www.computar-global.com

For more detailed information, please visit 3AM's website,
or contact with the sales representatives from 3AM.

www.3amled.com